FOR SERIES 1 ATTACHMENTS

STALL TYPE INSTALLATION
1/16 WRENCH TIP

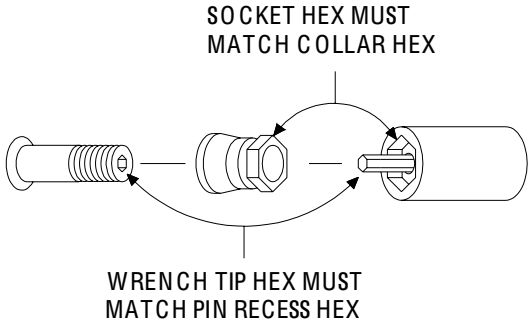

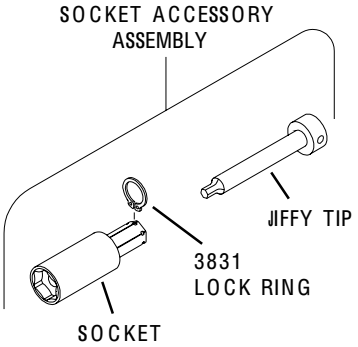

FOR 12 POINT CONFIGURATION ADD X AFTER SOCKET OR SOCKET ACCESSORY ASSEMBLY NUMBER.

			LENGTH OF SOCKET				
WRENCH TIP HEX	SOCKET HEX	DESCRIPTION	1/4	1/2	3/4	1	1 1/2
1/16	7/32	SOCKET ACCESSORY ASSEMBLY	12492	12493	12494	12495	12496
		SOCKET	12517	12518	12519	12520	12521
		JIFFY TIP 1/16 STALL	12542	12543	12544	12545	12546
	1/4	SOCKET ACCESSORY ASSEMBLY	12497	12498	12499	12500	12501
		SOCKET	12522	12523	12524	12525	12526
		JIFFY TIP 1/16 STALL	12542	12543	12544	12545	12546
	9/32	SOCKET ACCESSORY ASSEMBLY	12502	12503	12504	12505	12506
		SOCKET	12527	12528	12529	12530	12531
		JIFFY TIP 1/16 STALL	12542	12543	12544	12545	12546
	5/16	SOCKET ACCESSORY ASSEMBLY	12507	12508	12509	12510	12511
		SOCKET	12532	12533	12534	12535	12536
		JIFFY TIP 1/16 STALL	12542	12543	12544	12545	12546
	11/32	SOCKET ACCESSORY ASSEMBLY	12512	12513	12514	12515	12516
		SOCKET	12537	12538	12539	12540	12541
		JIFFY TIP 1/16 STALL	12542	12543	12544	12545	12546