FOR SERIES 2 ATTACHMENTS

TORQUE CONTROL INSTALLATION
3/32 WRENCH TIP

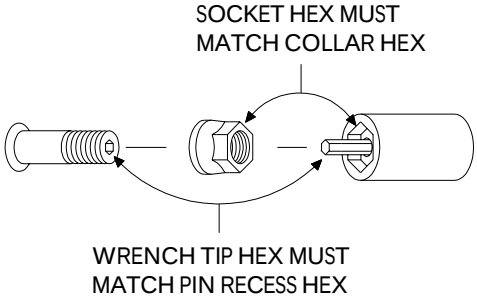

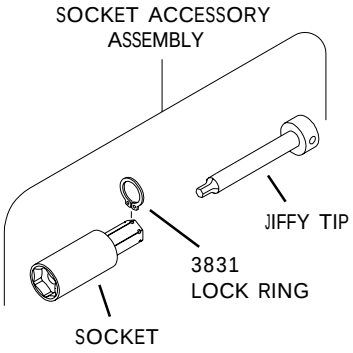

FOR 12 POINT CONFIGURATION ADD X AFTER SOCKET OR
SOCKET ACCESSORY ASSEMBLY NUMBER.

			LENGTH OF SOCKET						
WRENCH TIP HEX	SOCKET HEX	DESCRIPTION	1/4	1/2	1	1 1/2	2	2 1/2	3
3/32	5/16	SOCKET ACCESSORY ASSEMBLY	12914	12915	14448	12917	12918	12919	12920
		SOCKET	12699	12700	14445	12701	12702	12703	12704
		JIFFY TIP 3/32 TORQUE	12942	12943	12944	12945	12946	12947	12948
	11/32	SOCKET ACCESSORY ASSEMBLY	12921	12922	12923	12924	12925	12926	12927
		SOCKET	12705	12706	12707	12708	12709	12710	12711
		JIFFY TIP 3/32 TORQUE	12942	12943	12944	12945	12946	12947	12948
	3/8	SOCKET ACCESSORY ASSEMBLY	12928	12929	12930	12931	12932	12933	12934
		SOCKET	12767	12768	12769	12770	12771	12772	12773
		JIFFY TIP 3/32 TORQUE	12942	12943	12944	12945	12946	12947	12948
	7/16	SOCKET ACCESSORY ASSEMBLY	12935	12936	12937	12938	12939	12940	12941
		SOCKET	12872	12873	12874	12875	12876	12877	12878
		JIFFY TIP 3/32 TORQUE	12942	12943	12944	12945	12946	12947	12948