S-3137

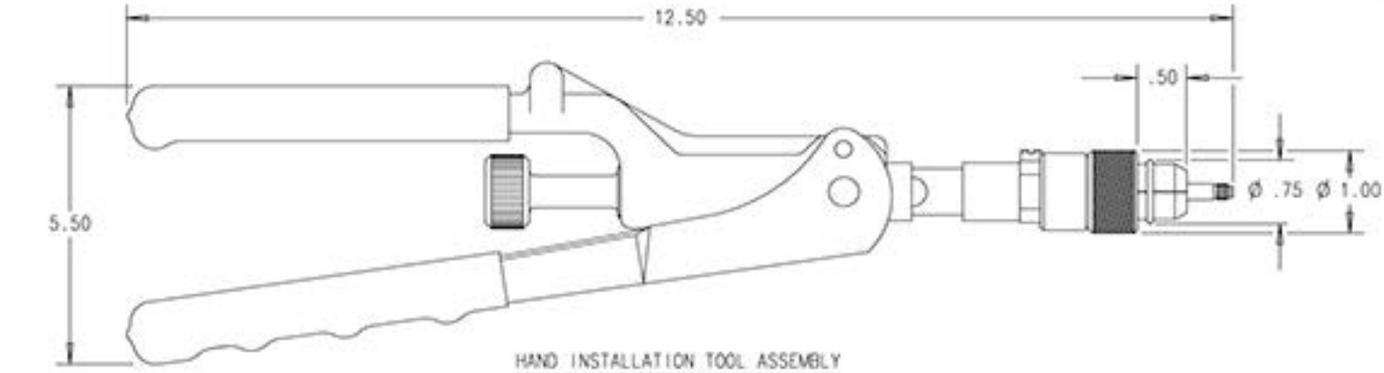

HAND INSTALLATION TOOL ASSEMBLY
D ( ) T860 ( ) - ( ) - ( )

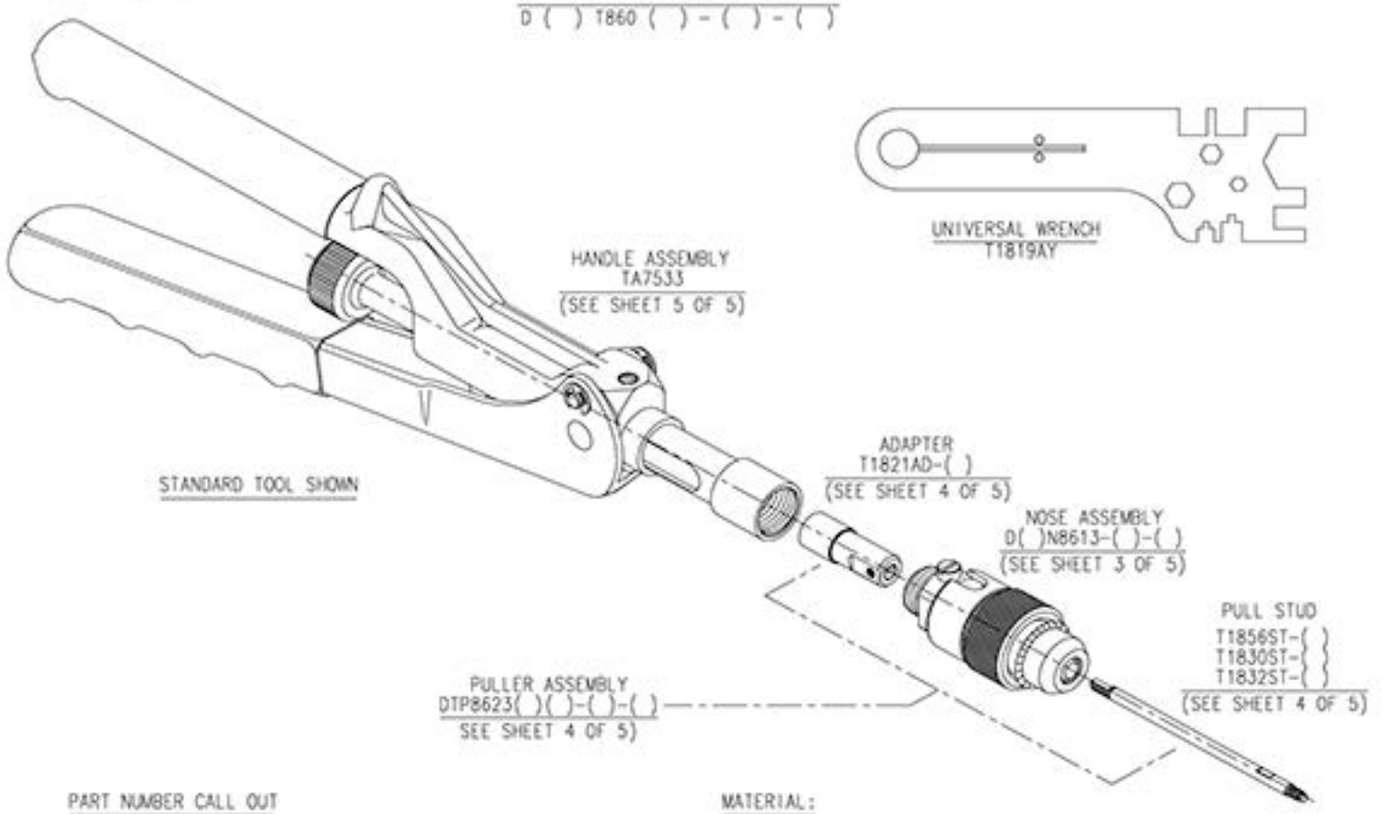

PART NUMBER CALL OUT

D ( ) T860 ( ) - ( ) - ( )

2

THREAD SIZE CODE

4

CONFIGURATION	
0	STANDARD
1	REDUCED Ø
2	CLOSE TOLERANCE
3	CLOSE TOLERANCE RS
4	CLOSE TOLERANCE RM
5	REDUCED Ø WITH BUSHING

5 5

CONFIGURATION	
CB	COUNTERBORE
CS	COUNTERSINK

MATERIAL:

HANDLE ASSEMBLY:
LOW CARBON STEEL.
NOSE ASSY. COMPONENETS:
HIGH CARBON STEEL HARDENED.
PULL STUD:
H-11 HEAT TREAT TO Rc 50 MIN.
ADAPTOR:
4130 ALLOY STEEL HEAT TERAT TO Rc 38-42.
WRENCH:
CARBON STEEL.

FINISH:

ALL COMPONENETS/ASSY.:
BLACK OXIDE.

NOTES:

1. FOR INSATLLATION INSTRUCTIONS SEE SHEET 2 OF 5.
2. LENGTH CODE FOR VARIABLE NUT HEIGHTS SEE SHEET 4 OF 5. NOT REQUIRED FOR STANDARD NUT HEIGHTS.
3. CAUTION: DO NOT USE THIS TOOL TO INSTALL FASTENERS ON PARENT MATERIAL HARDER THAN BHN200 (RB100). AS THIS MAY OVER STRESS THE TOOL. CONSULT HUCK INTERNATIONAL INC. (LAKEWOOD OPERATIONS) PANEL FASTENER ENGINEERING DEPARTMENT FOR ALTERNATE TOOLING.
4. SEE SHEET 5 OF 5 FOR USAGE.
5. RM=REPAIR MODIFIED
   RS=REPAIR STANDARD

REV	E.O. NO.	DATE	BY	APPD
G	5615	6/16/95	JR	
F	4643	8/31/87	Y	MA
E	4436A	11/17/86	JR	EK
D	4291	2/21/86	Y	CS
C	4167	10/30/85	AS	CS

REVISION

TOLERANCE
DIMENSIONS IN INCHES
UNLESS OTHERWISE SPECIFIED
FRACTIONS ± 1/32 ANGLES ± 2°
2 PLACE DECIMALS ± .02
3 PLACE DECIMALS ± .015

PREPARED IN ACCORDANCE WITH ANSI Y14.5M

THIRD ANGLE PROJECTION
DUAL DIMENSIONING IN MM. TOL. MM

SCALE NONE

REL. DATE 10/07/83

HUCK

Huck International, Inc.
Advanced Fastening Systems
TUCSON DIVISION
3724 E. COLUMBIA ST.
TUCSON, AZ 85714

DATE: 6/16/95
DR. BY:
CHK. BY:
APPD. BY:

UNIVERSAL HAND INSATALLATION TOOL
FOR RIVETLESS FLOATING NUT PLATES.

SIZE	CODE IDENT NO.	PART NO.
A	OHDW7	D( )T860

DWG NO. S-3137 SHEET 1 OF 5

S-3137

INSTALLATION OF RIVETLESS NUT PLATES

PANEL PREPARATION

FOR MOUNTING HOLE DIMENSIONS SEE HUCK INTERNATIONAL DRAWING S-0774 OR EQUIVALENT.

FIRST OPERATION

STEP 1: THE PRESSURE PAD COLLETS OF THE FLARING NOSE ASSEMBLY SHOULD BE POSITIONED TO THE FORWARD END OF AXIAL TRAVEL, PROVIDING A RECESS FOR THE FIRST OPERATION. ROTATE THE KNURLED COLLAR SO THAT THE SLOT DOES NOT ALIGN WITH THE STOPPING SCREW WHICH PROVIDES A POSITIVE STOP AGANIST THE SCREW PLUG. THIS PREVENTS THE PRESSURE PAD COLLETS FROM RETRACTING AND OPENING UP PREMATURELY.

STEP 2: INSERT NUT PLATE ASSEMBLY SLEEVE THRU PREPARED HOLE AND SCREW PULL STUD INTO NUT UNTIL FULL THERAD ENGAGEMENT IS ACHIEIVED.

STEP 3: CLOSE HANDLES OF TOOL, WHICH PULLS THE NUT PLATE ASSEMBLY SLEEVE FIRST INTO PERPARIED HOLE, UNTIL BRACKET IN SEATED FIRMLY AGAINST THE PANEL AND LOBES ARE FULLY ENGAGED.

SECOND OPERATION

STEP 4: WITHOUT DISENGAGING THE TOOL, ROTATE THE KNURLED COLLAR TO ALIGN THE SLOT IN THE SCREW PLUG WITH THE STOPPING SCREW. OPEN THE HANDLES OF THE TOOL AND RETRACT THE PRESSURE PAD BY PULLING IT BACK AGAINST THE STOP. THIS WILL EXPOSE THE FLARING TIP SURFACE. EPOSING THE FLARING TIP SURFACE IS NECESSARY TO INSURE FULL FLARING CAPABILITY OF SLEVEE SKIRT.

STEP 5: CLOSE HANDLES TO FLARE OR SWAGE SLEEVE SKIRT, THIS CAPTIVATES THE NUT. ENOUGH PRESSURE SHOULD BE APPLIED TO FORM A FLAT UPSET AGIANST THE PANEL. IN CASE OF EXTRA LONG SLEEVE PROTRUSION, MATERIAL WILL ROLL OVER RESULTING IN A HIGHER RADIUSED UPSET. CAUTION: DO NOT TRY TO COMPLETELY FLATTEN MATERIAL AS TOOL MIGHT BE OVER STRESSED DUE TO COLD WORKING OF SLEEVE MATERIAL.

STEP 6: LOOSEN HANDLES OF TOOL. DISENGAGE PULL STUD FROM NUT PLATE INSTALLATION IS COMPLETE.

TO ADJUST TOOL TO DESIRED GRIP LENGTH

1. SET SCREW MUST BE BACKED OFF TO PERMIT FREE MOVEMENT OF THE TELESCOPING TUBE.
2. ROTATE ADJUSTING KNOB CLOCKWISE OR COUNTER-CLOCKWISE TO OBTAIN DESIRED GRIP LENGTH ADJUSTMENT. THIS IS INDICATED WHEN THE MARK OPPOSITE THE GRIP LENGTH LETTER ON THE TELESCOPING TUBE IS IN LINE WITH THE EDGE OF THE TOOL HANDLE. PUSH THE TUBE BACK TOWARDS THE HANDLE TO INSURE ACCURATE POSITIONING.
3. TIGHTEN SET SCREW.

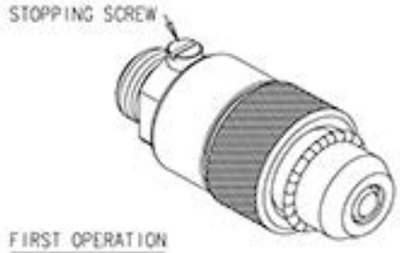

FIRST OPERATION

SLEEVE LOBES ARE DRAWN INTO PANEL

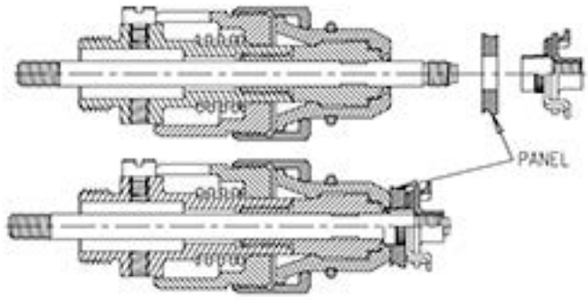

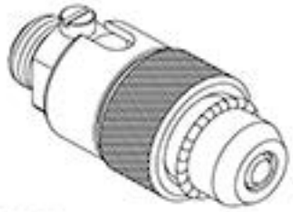

SECOND OPERATION

SLEEVE SKIRT IS FLARED.

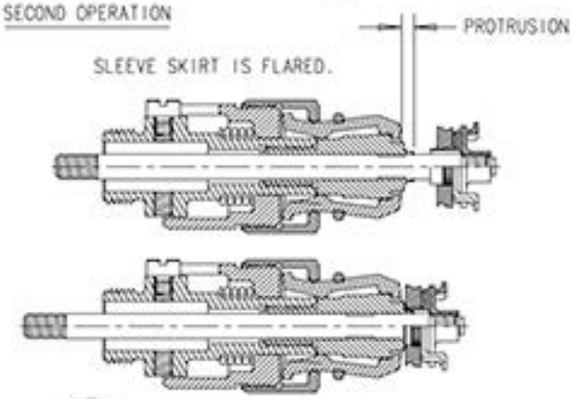

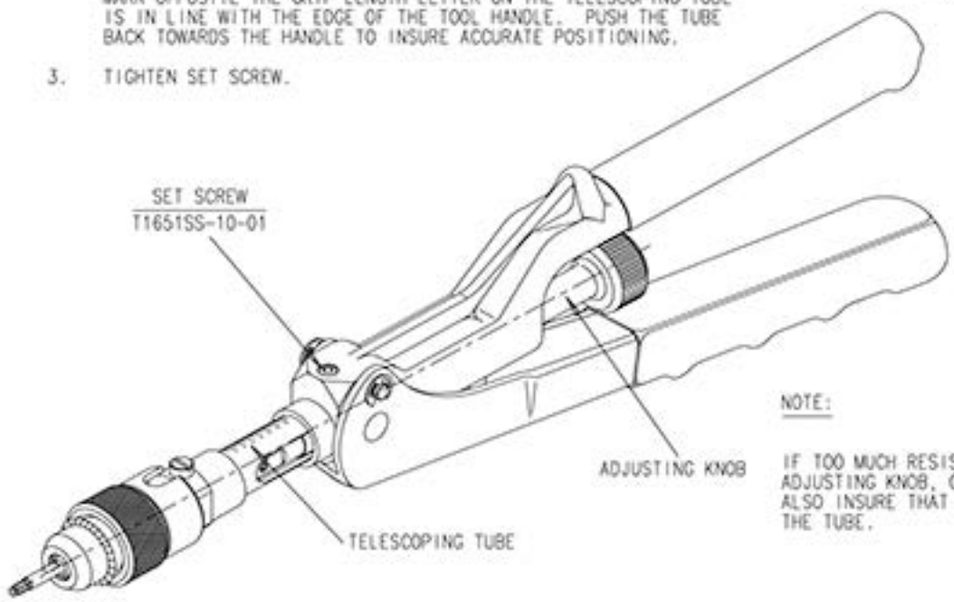

NOTE:

IF TOO MUCH RESISTANCE IN ENCOUNTERED WHEN ROTATING THE ADJUSTING KNOB, CLOSE THE HANDLES WIHLE TURNING THE KNOB ALSO INSURE THAT THE SET SCREW IS NOT PRESSING AGAINST THE TUBE.

REV	E.O. NO.	DATE	BY	APPD
G	5615	6/16/95	JR	
F	4643	8/31/87	Y	MA
E	4436A	11/17/86	JR	EK
D	4291	2/21/86	Y	CS
C	4167	10/30/85	AS	CS

REVISION

TOLERANCE
DIMENSIONS IN INCHES UNLESS OTHERWISE SPECIFIED
FRACTIONS ± 1/32 ANGLES ± 2°
2 PLACE DECIMALS ± .02
3 PLACE DECIMALS ± .015

PREPARED IN ACCORDANCE WITH ANSI Y14.5M

THIRD ANGLE PROJECTION
DUAL DIMENSIONING IN MM. TOL. MM

SCALE NONE

DATE 10/07/83

HUCK

Huck International, Inc.
Advanced Fastening Systems
TUCSON DIVISION
3724 E. COLUMBIA ST.
TUCSON, AZ 85714

DATE: 6/16/95
DR. BY:
CHK. BY:
APPD. BY:

UNIVERSAL HAND INSATALLATION TOOL FOR RIVETLESS FLOATING NUT PLATES.

SIZE A | CODE IDENT NO. OHDW7 | PART NO. D( )T860

DWG NO. S-3137 | SHEET 2 OF 5

S-3137

COMPONENTS OF NOSE PIECE

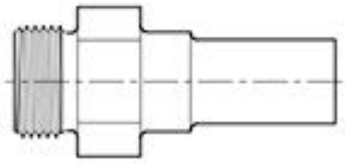

FLARING TIP ADAPTER
T1808AD

SPRING
T1808SG

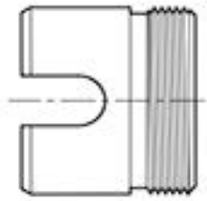

SCREW PLUG
T1808PG

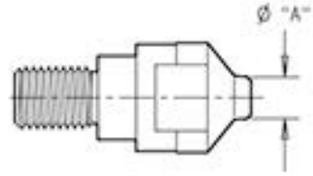

FLARING TIP
SEE TABLE II

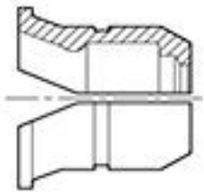

PRESSURE PAD
T1808PD - ( ) STD.
T1809PD - ( ) REDUCED Ø
(ONE SET OF 4 REQ'D.)

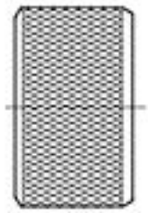

COLLAR
T1808CO

RUBBER
RETAINING RING
T18080R

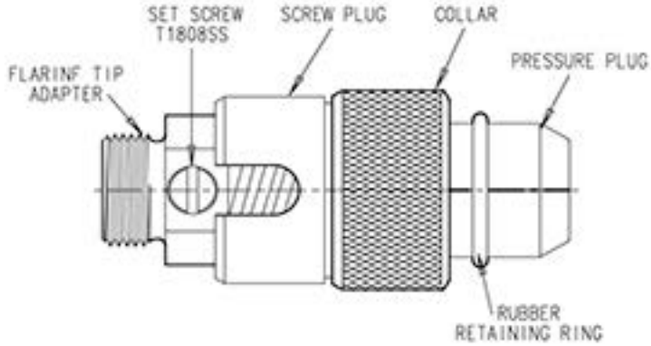

FLARING NOSE ASSEMBLY - COLLET TYPE
PART No.# D ( ) N8613 ( ) - ( )

TABLE I

NUT SIZE CODE	TYPE OF NUT PLATE FF/FHF	TYPE OF NUT PLATE HF9	THREAD SIZE	Ø "A" NUT PLATE FF	Ø "A" NUT PLATE FHF	Ø "A" NUT PLATE HF9
01	4	N/A	.112-40 UNC	.286	.257	TBD.
			M3 x 0.5			
	6		.138-32 UNC		.278	
			M3.5 x 0.6			
02	8	8	.164-32 UNC	.362	.302	
	M4	N/A	M4 x 0.7			
	10	10	.190-32 UNF		.340	
	M5	N/A	M5 x 0.8			
03	12		.250-28 UNF	.482	.390	
	M6		M6 x 1.0			

TABLE II

PART No. CALL OUT	FLARING TIP	STYLE
DCBN86130 - ( )	T1808FT - ( )	C'BORE
DCSN86130 - ( )	T1829FT - ( )	C'SINK 100°
DCBN86131 - ( )	T1809FT - ( )	C'BORE
DCSN86131 - ( )	T1831FT - ( )	C'SINK 100°
DCBN86132 - ( )	T1850FT - ( )	C'BORE
DCSN86132 - ( )	T1853FT - ( )	C'SINK 100°
DCBN86133 - ( )	T1851FT - ( )	C'BORE
DCBN86134 - ( )	T1852FT - ( )	C'BORE
DCSN86134 - ( )	T1854FT - ( )	C'SINK 100°
DCSN86135 - ( )	T1875FT - ( )	C'BORE
DCBN86135 - ( )	T1876FT - ( )	C'SINK 100°

PART No. CALL OUT

D ( ) N8613 ( ) - ( )

- BASIC TOOL NO.#
- TABLE 1 TREAD SIZE CODE

CONFIGURATION	
0	STANDARD
1	REDUCED Ø
2	CLOSE TOLERANCE
3	CLOSE TOLERANCE RS
4	CLOSE TOLERANCE RM
5	REDUCED Ø W/BUSHING

TYPE	
CB	COUNTERBORE
CS	COUNTERSINK

MATERIAL:
NOSE ASSEMBLY COMPONENETS:
HIGH CARBON STEEL HARDENED.

FINISH:
NOSE ASSEMBLY COMPONENETS:
BLACK OXIDE

NOSE PEICE ASSEMBLY

1. PLACE SPRING (T1808SG) ONTO ADAPTER (T1808AD).
2. PLACE SCREW PLUG (T1808SG) OVER SPRING AND ADPTER.
3. SCREW FLARING TIP INTO ADPATER USING WRENCH.
4. PLACE PRESSURE PAD SECTION (T1808PD-( ) 4 x) OVER FLARING TIP. •SUGGESTION• HOLD ASSY UPRIGHT ON FLAT SURFACE, COMPRESS THE SCREW PLUG AND "HANG" THE FOUR PRESSURE PAD PIECES ON THE FLARING TIP.
5. SLIDE COLLAR (T18080CO) OVER PRESSURE PAD SECTIONS AND SCREW DOWN ONTO THE SCREW PLUG.
6. PLACE RUBBER RETAINING RING (T18080R) INTO GROOVE ON PRESSURE PAD.

CHECK FINAL ASSEMBLY:

A) RETRACT THE PRESSURE PAD BY PULLING IT BACK TO THE STOPPING SCREW (EPOSING FLARING TIP).

B) SLIDE IT BACK TO THE FOWARD END POSITION.

C) CHECK FOR SMOOTH OPERATION MOTION.

REV	E.O. NO.	DATE	BY	APPD
G	5615	6/16/95	JR	
F	4643	8/31/87	Y	MA
E	4436A	11/17/86	JR	EK
D	4291	2/21/86	Y	CS
C	4167	10/30/85	AS	CS

REVISION

TOLERANCE
DIMENSIONS IN INCHES
UNLESS OTHERWISE SPECIFIED
FRACTIONS ± 1/32 ANGLES ± 2°
2 PLACE DECIMALS ± .02
3 PLACE DECIMALS ± .015

PREPARED IN ACCORDANCE WITH ANSI Y14.5M

THIRD ANGLE PROJECTION
DUAL DIMENSIONING IN MM. TOL. MM

SCALE NONE

REL. DATE 10/07/83

HUCK

Huck International, Inc.
Advanced Fastening Systems
TUCSON DIVISION
3724 E. COLUMBIA ST.
TUCSON, AZ 85714

DATE: 6/16/95
DR. BY:
CHK. BY:
APPD. BY:

UNIVERSAL HAND INSATALLATION TOOL
FOR RIVETLESS FLOATING NUT PLATES.

SIZE	CODE IDENT NO.	PART NO.
A	OHDW7	D( )T860

DWG NO. S-3137 SHEET 3 OF 5

S-3137

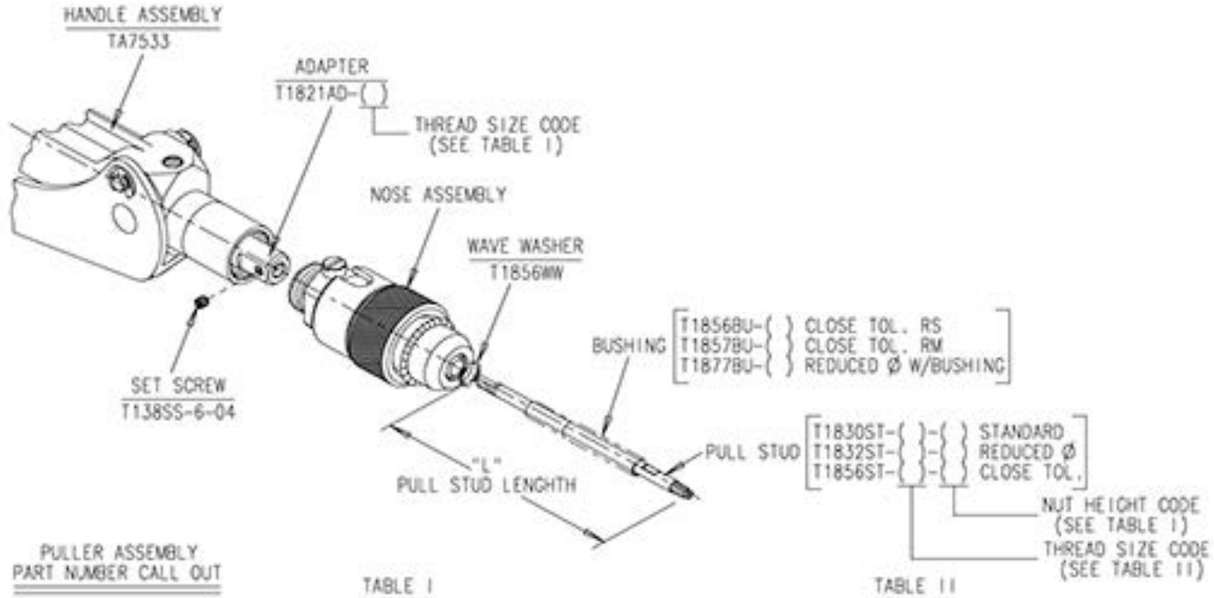

PULLER ASSEMBLY
PART NUMBER CALL OUT

DTP 8623 ( ) - ( ) - ( )

BASIC TOOL NUMBER

TABLE I

NUT HEIGHT CODE	THREAD SIZE "L" 4, 6	8, 10	12
1	3.094	3.125	3.187
2	3.156	3.187	3.250
3	3.218	3.250	3.312
4	3.281	3.312	3.375
5	3.343	3.375	3.437
6	3.406	3.437	3.500

TABLE II

ASSEMBLY	PULLER	BUSHING
DTP86230L( )-( )	T1825ST-( )-( )	N/A
DTP86230NL( )-( )	T1830ST-( )-( )	N/A
DTP86231L( )-( )	T1822ST-( )-( )	N/A
DTP86231NL( )-( )	T1832ST-( )-( )	N/A
DTP86232( )-( )-( )	T1856ST-( )-( )	T1856BU-( )-( )
DTP86233( )-( )-( )	T1856ST-( )-( )	T1856BU-( )-( )
DT86234( )-( )-( )	T1856ST-( )-( )	T1857BU-( )-( )
DTP86235( )-( )-( )	T1856ST-( )-( )	T1877BU-( )-( )

THREAD SIZE CODE	THREAD SIZE	LEAD	CODE FF	FHF
4	.112-40 UNJC-3A	SINGLE	02	05
6	.138-32 UNJC-3A		02	01
8	.164-32 UNJC-3A		04	02
10	.190-32 UNJF-3A		04	02
12	.250-28 UNJF-3A		04	03
10C	.190-24 UNC-3A	SINGLE (COARSE)	04	02
12C	.250-20 UNC-3A		04	03
4F	.112-40 UNF-3A	DOUBLE	02	05
6F	.138-32 UNJC-3A		02	01

THREAD SIZE CODE	THREAD SIZE	LEAD	CODE FF	FHF
6QD	.138-32 UNJC-3A	QUAD	02	01
8F	.164-32 UNJC-3A		04	02
10F	.190-32 UNJF-3A		04	02
12F	.250-28 UNJF-3A		04	03
M3	MJ3 x 0.5-4H6H	METRIC	02	05
M3.5	MJ3.5 x 0.6-4H6H		02	01
M4	MJ4 x 0.7-4H6H		04	02
M5	MJ5 x 0.8-4H6H		04	02
M6	MJ6 x 1.0-4H5H		04	03

CONFIGURATION	
0	STANDARD
1	REDUCED Ø
2	CLOSE TOLERANCE
3	CLOSE TOLERANCE RS
4	CLOSE TOLERANCE RM
5	REDUCED Ø W/BUSHING

MATERIAL:

PULL STUD:
H-11 ALLOY STEEL, HEAT TREAT TO Rc 50 MIN.

ADAPTER:
4130 ALLOY STEEL, HEAT TREAT TO Rc 38-42.

FINISH:

PULL STUD & ADAPTER:
BLACK OXIDE

INSTUCTIONS FOR STADARD AND REDUCED Ø TOOL ASSEMBLY APPLICATIONS

1. SCREW ADAPTER INTO HANDLE ASSEMBLY, USING LOCTITE.
2. SCREW NOSE PIECE ASSEMBLY INTO HANDLE ASSEMBLY UNTIL IT (SEATS OR BOTTOMS OUT) AGAINST END OF TELESCOPING TUBE
3. INSERT PULL STUD INTO NOSE PIECE AND SCREW INTO ADAPTER USING A WRENCH ON ADAPTERS HEX OF FLATS AND TIGHTEN.

INSTRUCTIONS FOR CLOSE TOLERANCE TOOL ASSEMBLY APPLICATION
(BUSHING USAGE ONLY IN CLOSE TOL. APPLICATION)

1. SCREW ADAPTER INTO HANDLE ASSEMBLY, USING LOCTITE.
2. SCREW NOSE PIECE ASSEMBLY INTO HANDLE ASSEMBLY UNTIL IT (SEATS OR BOTTOMS OUT) AGAINST END OF TELESCOPING TUBE
3. INSERT BUSHING ON TO PULL STUD AND INSERT BOTH INTO NOSE PIECE.
4. PLACE WAVE WASHER ON PULL STUD AND SCREW PULL STUD INTO ADAPTER, ALIGN FLAT ON STUD WITH SET SCREW HOLE.
5. TIGHTEN SET SCREW IN ADAPTER SO THAT IT'S TIGHT BITTING DOWN ON FLAT OF PULL STUD. (TO LOCK PULL STUD TO A DESIRED ADJUSTMENT PROTRUSION LENGTH).
6. SCREW NOSE PIECE INTO TOOL HANDLE ASSEMBLY, USING WRENCH ON HEX OR FLATS, TIGHTEN.

REV	E.O. NO.	DATE	BY	APPD
G	5615	6/16/95	JR	
F	4643	8/31/87	Y	MA
E	4436A	11/17/86	JR	EK
D	4291	2/21/86	Y	CS
C	4167	10/30/85	AS	CS

REVISION

TOLERANCE
DIMENSIONS IN INCHES
UNLESS OTHERWISE SPECIFIED
FRACTIONS ± 1/32 ANGLES ± 2°
2 PLACE DECIMALS ± .02
3 PLACE DECIMALS ± .015

PREPARED IN ACCORDANCE WITH ANSI Y14.5M

THIRD ANGLE PROJECTION
DUAL DIMENSIONING IN MM. TOL. MM

SCALE NONE | DATE 10/07/83

HUCK

Huck International, Inc.
Advanced Fastening Systems
TUCSON DIVISION
3724 E. COLUMBIA ST.
TUCSON, AZ 85714

DATE: 6/16/95
DR. BY:
CHK. BY:
APPD. BY:

UNIVERSAL HAND INSATALLATION TOOL
FOR RIVETLESS FLOATING NUT PLATES.

SIZE	CODE IDENT NO.	PART NO.
A	OHDW7	D( )T860

DWG NO. S-3137 | SHEET 4 OF 5

S-3137

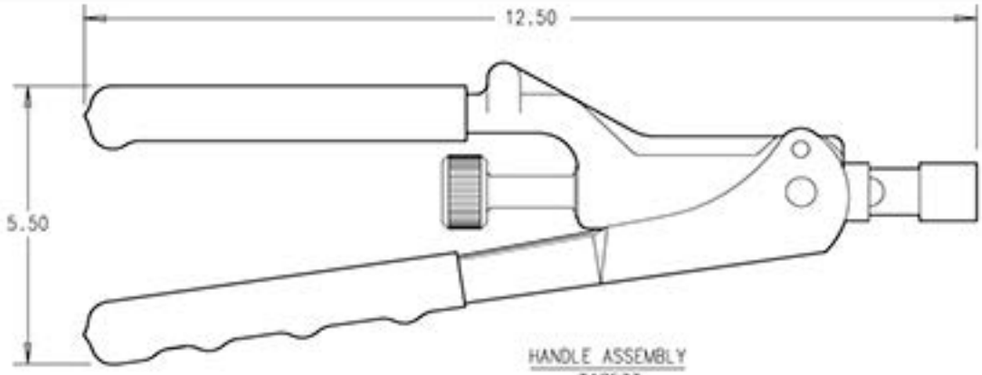

HANDLE ASSEMBLY
TA7533

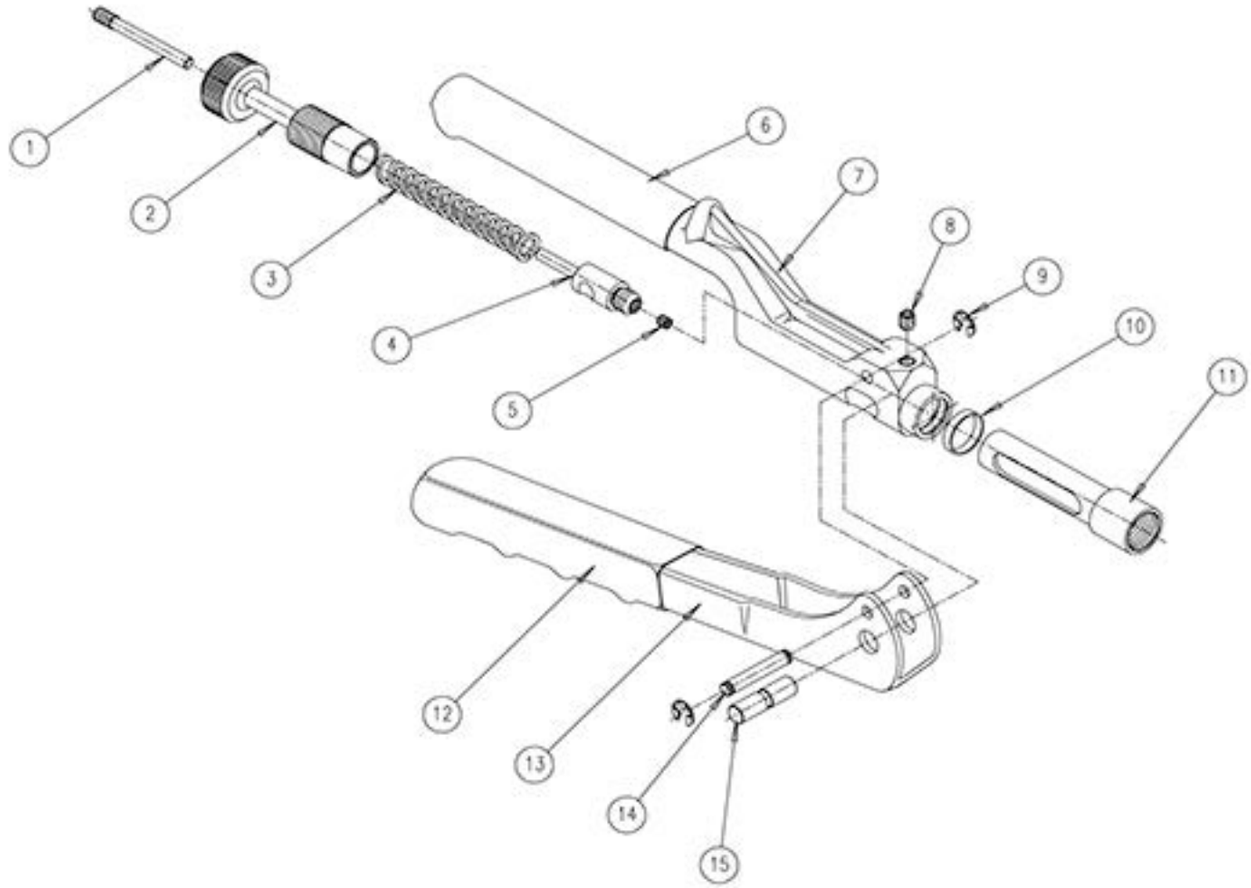

PART NUMBER	STYLE	NOSE PIECE ASSY.	FASTENER TYPE
DCBT8600( )-( )-( )	C'BORE	DCBN86130-( )	FF6010( )-( )
DCST8600( )-( )-( )	C'SINK	DCSN86130-( )	
DCBT8601( )-( )-( )	C'BORE	DCBN86131-( )	FHF6010( )-( )
DCST8601( )-( )-( )	C'SINK	DCSN86131-( )	
DCBT8602( )-( )-( )	C'BORE	DCBN86132-( )	FHFCT6010( )-( )
DCST8602( )-( )-( )	C'SINK	DCSN86132-( )	
DCBT8603( )-( )-( )	C'BORE	DCBN86133-( )	RSFCT6010( )-( )
DCST8603( )-( )-( )	C'SINK	DCSN86133-( )	
DCBT8604( )-( )-( )	C'BORE	DCBN86134-( )	RMFCT6010( )-( )
DCST8604( )-( )-( )	C'SINK	DCSN86134-( )	
DCBT8605( )-( )-( )	C'BORE	DCBN86135-( )	FHF6010( )-( )
DCST8605( )-( )-( )	C'SINK	DCSN86135-( )	

ITEM NO.#	PART NUMBER	DESCRIPTION	QTY.
1	T1820PG	TRAVEL STOP SCREW	1
2	T1820RE	ADJUSTING KNOB	1
3	T1820SG	SPRING	1
4	T1820AD	GUIDE	1
5	T0138SS-10-08	CROSS PIN LOCK SCREW	1
6	T1618HA-12	UPPER HANDLE	1
7	T1802HO	HANDLE HOUSING	1
8	T1651SS-10-01	LOCK SCREW	1
9	T1598RR-18	RETAINING RING	2
10	T1820IN	TEFLON INSERT	1
11	T1820BL	TELESCOPING TUBE	1
12	T1618HA-11	LOWER GRIP	1
13	T1820HA	LEVER	1
14	T1820PI	HINGE PIN	1
15	T0166PI-BK	CROSS PIN	1

MATERIAL:

LOW CARBON STEEL

FINISH:

BLACK OXIDE

REV	E.O. NO.	DATE	BY	APPD
G	5615	6/16/95	JR	
F	4643	8/31/87	Y	MA
E	4436A	11/17/86	JR	EK
D	4291	2/21/86	Y	CS
C	4167	10/30/85	AS	CS

REVISION

TOLERANCE
DIMENSIONS IN INCHES
UNLESS OTHERWISE SPECIFIED
FRACTIONS ± 1/32 ANGLES ± 2°
2 PLACE DECIMALS ± .02
3 PLACE DECIMALS ± .015

PREPARED IN ACCORDANCE WITH ANSI Y14.5M

THIRD ANGLE PROJECTION
DUAL DIMENSIONING IN MM. TOL. MM

SCALE NONE

AL DATE 10/07/83

HUCK

DATE: 6/16/95
DR. BY:
CHK. BY:
APPD. BY:

Huck International, Inc.
Advanced Fastening Systems
TUCSON DIVISION
3724 E. COLUMBIA ST.
TUCSON, AZ 85714

UNIVERSAL HAND INSATALLATION TOOL
FOR RIVETLESS FLOATING NUT PLATES.

SIZE A | CODE IDENT NO. OHDW7 | PART NO. D( )T860

DWG NO. S-3137 | SHEET 5 OF 5

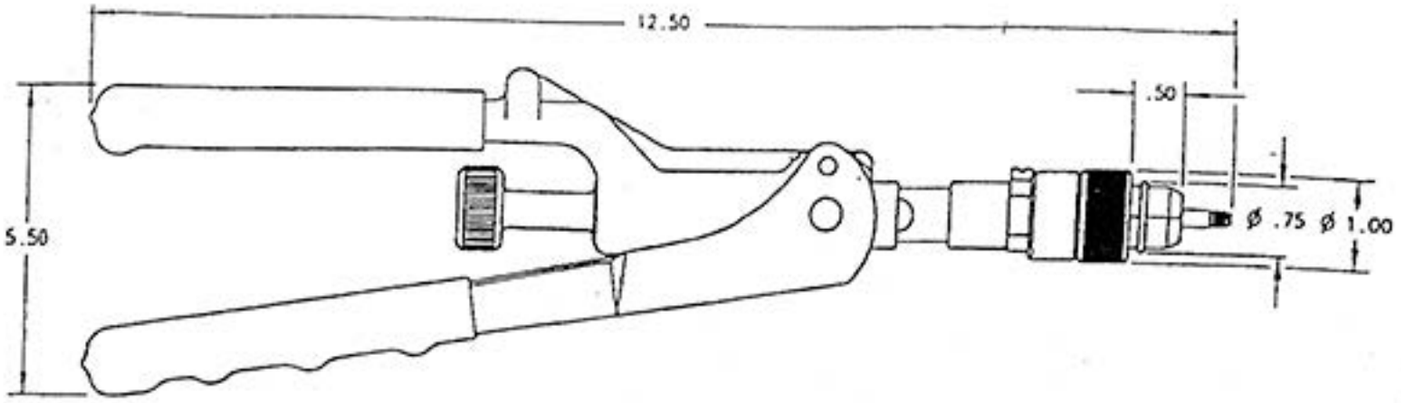

HAND INSTALLATION TOOL
FOR RIVETLESS NUTPLATES

Post-it® Fax Note 7671	Date 12-1	# of pages ▶ 3
To	From	
Co./Dept.	Co.	
Phone #	Phone #	
Fax #	Fax #	

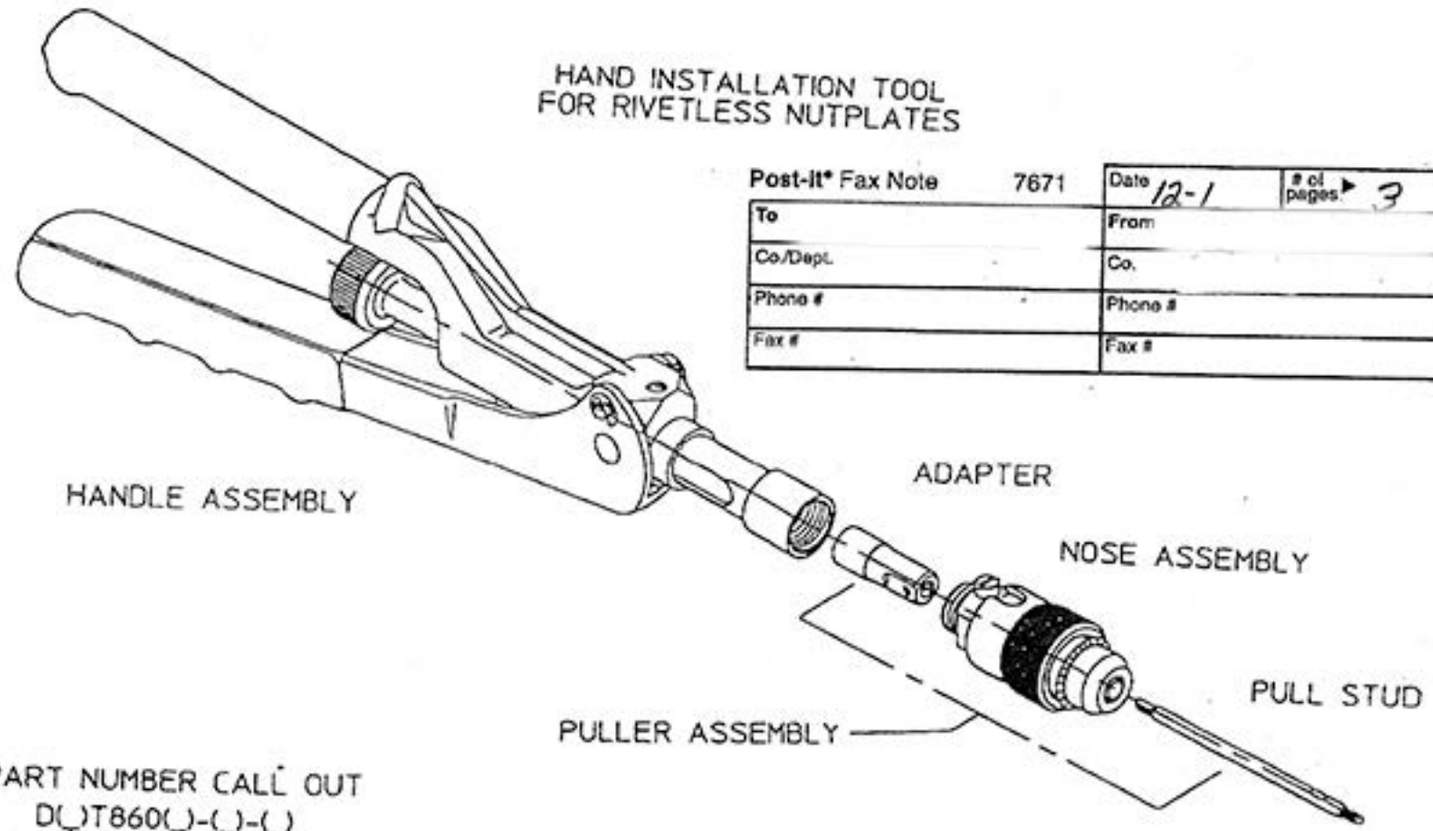

PART NUMBER CALL OUT

D(_)T860(_)-(_)-(_)

- LENGTH CODE FOR VARIABLE NUT HEIGHTS
- THREAD SIZE CODE

	CONFIGURATION	AVAILABLE IN
0	STANDARD	C'SINK & C'BORE
1	REDUCED Ø	C'SINK & C'BORE
2	CLOSE TOLERANCE	C'SINK & C'BORE
3	CLOSE TOLERANCE RS REPAIR STANDARD	C'BORE
4	CLOSE TOLERANCE RM REPAIR MODIFIED	C'SINK & C'BORE
5	REDUCED Ø WITH BUSHING	C'SINK & C'BORE
6	FF6010 120° C'SINK	C'SINK
7	STRUCURAL NUTPLATE HF9	C'SINK & C'BORE

	CONFIGURATION
CB	COUNTERBORE
CS	COUNTERSINK

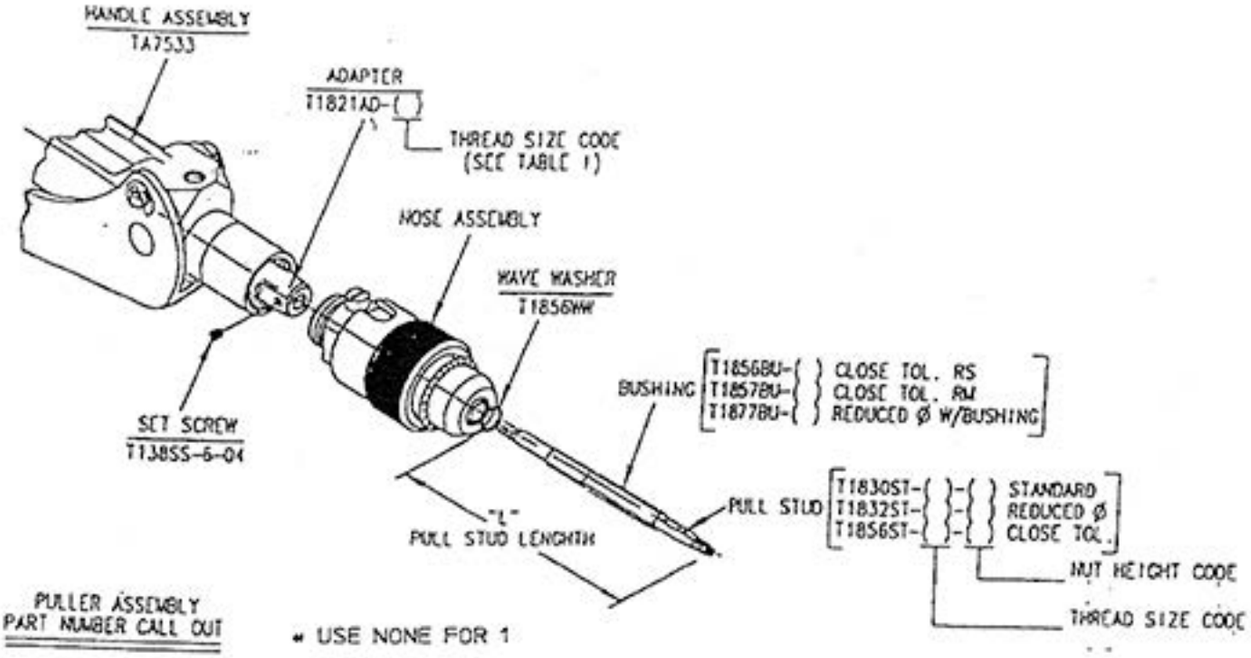

PULLER ASSEMBLY PART NUMBER CALL OUT

* USE NONE FOR 1

DTP 8623 ( ) - ( ) - ( )

BASIC TOOL NUMBER

NUT HEIGHT CODE	THREAD SIZE "L" 4, 6	8, 10	12
*	3.094	3.125	3.187
2	3.156	3.187	3.250
3	3.218	3.250	3.312
4	3.281	3.312	3.375
5	3.343	3.375	3.437
6	3.406	3.437	3.500

ASSEMBLY	PULLER	BUSHING
DTP86230-( )-( )	T1830ST-( )-( )	N/A
DTP86231-( )-( )	T1832ST_( )-(-)	N/A
DTP86232-( )-( )	T1856ST-( )-( )	T1856BU-( )
DTP86233-( )-( )	T1856ST-( )-( )	T1856BU-( )
DTP86234-( )-( )	T1856ST-( )-( )	T1857BU-( )
DTP86235-( )-( )	T1856ST-( )-( )	T1877BU-( )
DTP86237-( )-( )	T1903ST-( )-( )	N/A

THREAD SIZE CODE	THREAD SIZE	LEAD	CODE FF	FHF
4	.112-40 UNJC-3A	SINGLE	02	05
6	.138-32 UNJC-3A		02	01
8	.164-32 UNJC-3A		04	02
10	.190-32 UNJF-3A		04	02
12	.250-28 UNJF-3A		04	03
10C	.190-24 UNC-3A	SINGLE (COARSE)	04	02
12C	.250-20 UNC-3A		04	03
4F	.112-40 UNF-3A	DOUBLE	02	05
6F	.138-32 UNJC-3A		02	01

THREAD SIZE CODE	THREAD SIZE	LEAD	CODE FF	FHF
600	.138-32 UNJC-3A	QUAD	02	01
8F	.164-32 UNJC-3A		04	02
10F	.190-32 UNJF-3A		04	02
12F	.250-28 UNJF-3A		04	03
M3	MJ3 x 0.5-4H6H	METRIC	02	05
M3.5	MJ3.5 x 0.6-4H6H		02	01
M4	MJ4 x 0.7-4H6H		04	02
M5	MJ5 x 0.8-4H6H		04	02
M6	MJ6 x 1.0-4H6H		04	03

CONFIGURATION	
0	STANDARD
1	REDUCED Ø
2	CLOSE TOLERANCE
3	CLOSE TOLERANCE RS
4	CLOSE TOLERANCE RM
5	REDUCED Ø W/BUSHING
0	FF6010 120° C'SINK
7	STRUCTURAL NUTPLATE

INSTUCTIONS FOR STADARD AND REDUCED Ø TOOL ASSEMBLY APPLICATIONS

1. SCREW ADAPTER INTO HANDLE ASSEMBLY, USING LOCTITE.
2. SCREW NOSE PIECE ASSEMBLY INTO HANDLE ASSEMBLY UNTIL IT (SEATS OR BOTTOMS OUT) AGAINST END OF TELESCOPING TUBE
3. INSERT PULL STUD INTO NOSE PIECE AND SCREW INTO ADAPTER , USING A WRENCH ON ADAPTERS HEX OF FLATS AND TIGHTEN.

INSTRUCTIONS FOR CLOSE TOLERANCE TOOL ASSEMBLY APPLICATION (BUSHING USAGE ONLY IN CLOSE TOL. APPLICATION)

1. SCREW ADAPTER INTO HANDLE ASSEMBLY, USING LOCTITE.
2. SCREW NOSE PIECE ASSEMBLY INTO HANDLE ASSEMBLY UNTIL IT (SEATS OR BOTTOMS OUT) AGAINST END OF TELESCOPING TUBE
3. INSERT BUSHING ON TO PULL STUD AND INSERT BOTH INTO NOSE PIECE.
4. PLACE WAVE WASHER ON PULL STUD AND SCREW PULL STUD INTO ADAPTER, ALIGN FLAT ON STUD WITH SET SCREW HOLE.
5. TIGHTEN SET SCREW IN ADAPTER SO THAT IT'S TIGHT BITTING DOWN ON FLAT OF PULL STUD. (TO LOCK PULL STUD TO A DESIRED ADJUSTMENT PROTRUSION LENGTH).
6. SCREW NOSE PIECE INTO TOOL HANDLE ASSEMBLY, USING WRENCH ON HEX OR FLATS. TIGHTEN

COMPONENTS OF NOSE PIECE

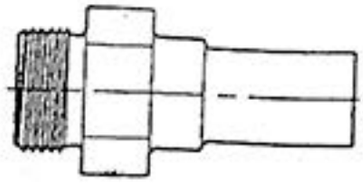

FLARING TIP ADAPTER
T1808AD

SPRING
T1808SG

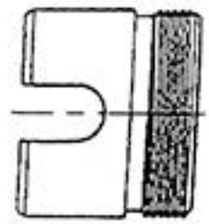

SCREW PLUG
T1808PG

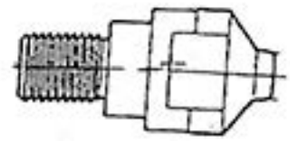

FLARING TIP
SEE TABLE II

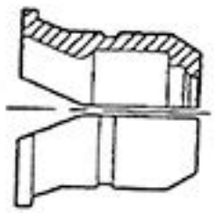

PRESSURE PAD
T1808PD - ( ) STD.
T1809PD - ( ) REDUCED Ø
(ONE SET OF 4 RED'D.)

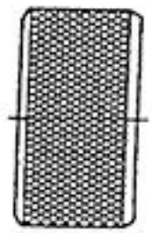

COLLAR
T1808CO

RUBBER
RETAINING RING
T1808OR

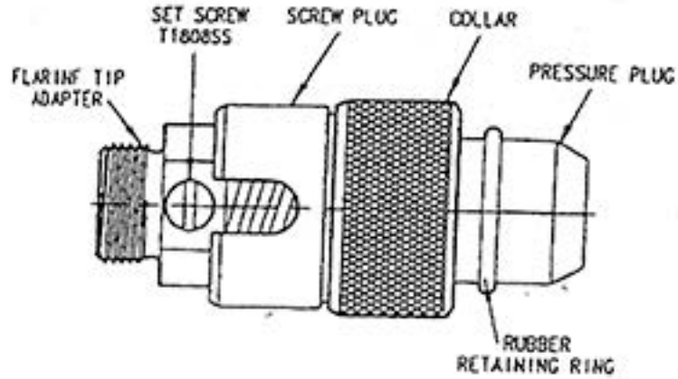

FLARING NOSE ASSEMBLY - COLLET TYPE
PART No./ D ( ) N8613 ( ) - ( )

TABLE 1

NUT SIZE CODE			THREAD SIZE
FF	FHF	HF9	
01	4	N/A	.112-40 UNC
			M3X0.5
	6		.138-32 UNC
			M3.5X0.6
02	8	02	164-32 UNC
	10		190-32 UNF
	M4	N/A	M4X0.7
	M5		M5X0.8
03	12	03	250-28 UNF
	M6	N/A	M6X1.0

ASSEMBLY	FLARE TIP	STYLE
DCBN86130-( )	T1808FT-( )	C'BORE
DCSN86130-( )	T1829FT-( )	C'SINK 100°
DCBN86131-( )	T1809FT-( )	C'BORE
DCSN86131-( )	T1831FT-( )	C'SINK 100°
DCBN86132-( )	T1850FT-( )	C'BORE
DCSN86132-( )	T1853FT-( )	C'SINK 100°
DCBN86133-( )	T1851FT-( )	C'BORE
DCBN86134-( )	T1852FT-( )	C'BORE
DCSN86134-( )	T1854FT-( )	C'SINK 100°
DCBN86135-( )	T1875FT-( )	C'BORE
DCSN86135-( )	T1876FT-( )	C'SINK 100°
DCSN86136-( )	T1892FT-( )	C'SINK 120°
DCBN86137-( )	T1930FT-( )	C'BORE
DCSN86137-( )	T1904FT-( )	C'SINK 100°

PART No. CALL OUT

D( )N8613( )-( )

SEE TABLE 1
NUT SIZE CODE FOR
TYPE OF CONFIGURATION

BASIC TOOL

	CONFIGURATION	NUT SIZE CODE
0	STANDARD	FF
1	REDUCED Ø	USE FHF
2	CLOSE TOLERANCE	
3	CLOSE TOLERANCE RS	
4	CLOSE TOLERANCE RM	
5	REDUCED Ø W/BUSHING	
6	FF6010 120° C'SINK	FF
7	STRUCTURAL NUTPLATE	HF9

TYPE	
CB	COUNTERBORE
CS	COUNTERSINK

NOSE PEICE ASSEMBLY

1. PLACE SPRING (T1808SG) ONTO ADAPTER (T1808AD).
2. PLACE SCREW PLUG (T1808SG) OVER SPRING AND ADPTER.
3. SCREW FLARING TIP INTO ADPATER USING WRENCH.
4. PLACE PRESSURE PAD SECTION (T1808PD-( ) 4 x) OVER FLARING TIP. *SUGGESTION* HOLD ASSY UPRIGHT ON FLAT SURFACE. COMPRESS THE SCREW PLUG AND "HANG" THE FOUR PRESSURE PAD PIECES ON THE FLARING TIP.
5. SLIDE COLLAR (T1808CO) OVER PRESSURE PAD SECTIONS AND SCREW DOWN ONTO THE SCREW PLUG.
6. PLACE RUBBER RETAINING RING (T1808OR) INTO GROOVE ON PRESSURE PAD.

CHECK FINAL ASSEMBLY:

A) RETRACT THE PRESSURE PAD BY PULLING IT BACK TO THE STOPPING SCREW (EPOSING FLARING TIP).

B) SLIDE IT BACK TO THE FOWARD END POSITION.

C) CHECK FOR SMOOTH OPERATION MOTION.