	A	B	C	D	E	SERIES 3 20 DEGREE DRILL	
INCH	.425	.975	.327	2.250	1.250	MAXIMUM RECOMMENDED DRILL DIAMETER	.312
MM	10.7	24.7	8.3	57.1	31.7		7.92 mm

ALL BEARING 20 DEGREE DRILLS

16243 ATTACHMENT ONLY

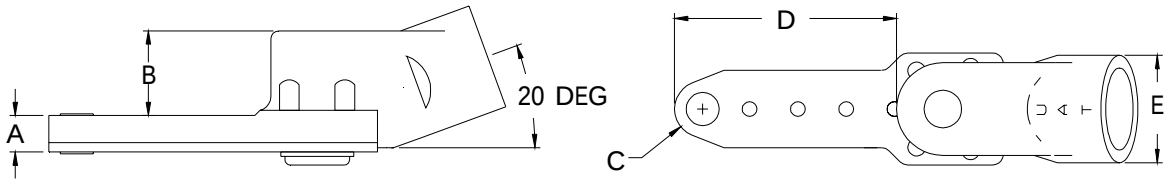

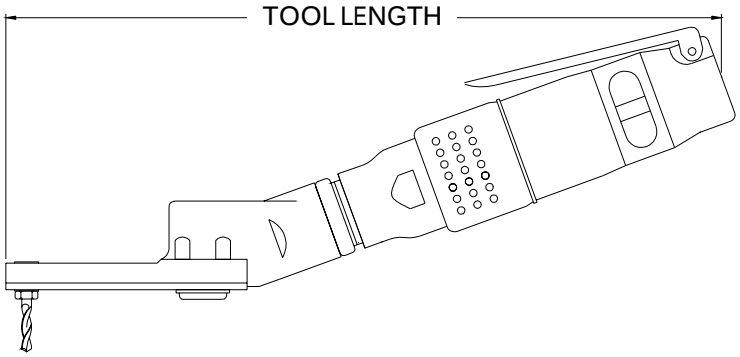

The high nickel alloy used in our drill attachment gears make this unit SUPERIOR in drilling performance.

THREADED DRILL

COLLET TYPE DRILL

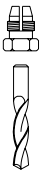

INTERNAL THREAD	
ADD TO TOOL No.	
1/4-28	A
10-32	C
9/32-40	E
5/16-24	F
COLLET	D

TOOL ORDER NUMBER	R.P.M.	LENGTH		WEIGHT	
		Inch	mm	Lbs.	Kg.
SD SERIES .30 HP MOTOR					
16268	250	11.0	279	1.9	.86
16269	500	11.0	279	1.9	.86
16270	750	110.	279	1.9	.86
16271	1000	11.0	279	1.9	.86
16272	1500	11.0	279	1.9	.86
16273	2800	10.1	256	1.7	.77
SD2 SERIES .60 HP MOTOR					
16274	250	12.1	307	3.5	1.5
16275	450	11.5	292	2.8	1.2
16276	1000	11.5	292	2.8	1.2
16277	2000	10.5	266	2.6	1.1
16278	2700	10.5	266	2.6	1.1
16279	3500	10.5	266	2.6	1.1
SRD2 REVERSIBLE .40 HP MOTOR					
16280	250	12.1	307	3.5	1.5
16281	450	11.5	292	2.8	1.2
16282	1000	11.5	292	2.8	1.2
16283	2000	10.5	266	2.6	1.1
16284	2700	10.5	266	2.6	1.1