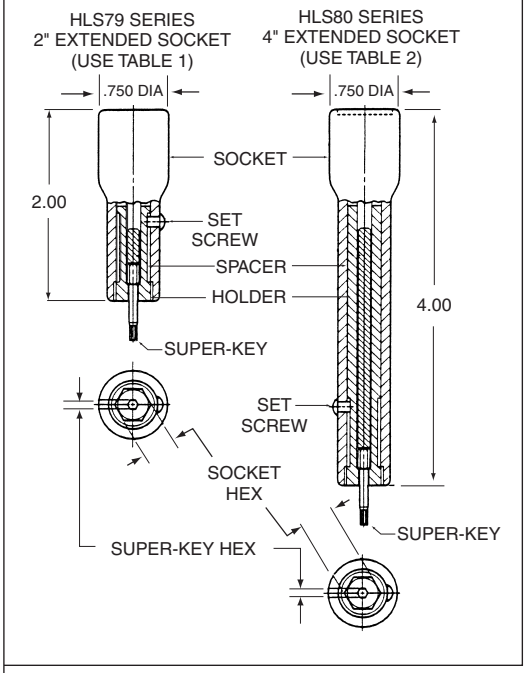

INSTALLATION TOOLING

SUPER HLA1051

Straight Driver Assembly with Extended Socket and Super-Key™ (T-Series)

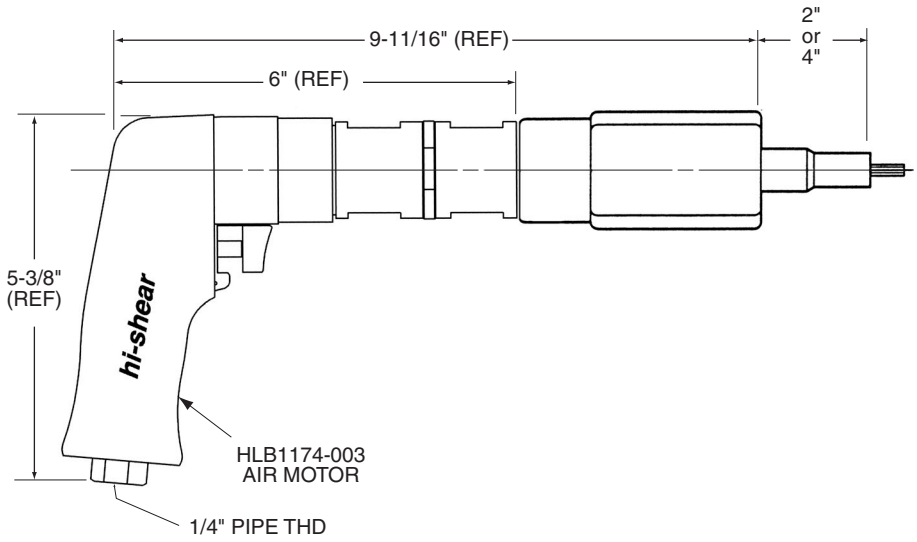

DRIVER BASIC PART NO. — SOCKET HEX REF. TABLE 1 OR 2 — SOCKET LENGTH: X = 4.0", NO LETTER = 2.0" — SUPER-KEY HEX REF. TABLE 1 OR 2. — SUPER-KEY (T-SERIES)

HLA1051-312(X)-078-T

Example: complete driver assy. part no.

ORDERING INFORMATION

1. Match pin and collar hexes with Super-Key Hex and Socket Hex.
2. See tables 1 & 2 for corresponding complete driver assy part no.

TECHNICAL DATA

Operating Pressure ..... 90 PSIA	Horsepower Rating 0.70
MAX. TORQUE RATING ..... 300 in. lb (Motor) @90 PSIA	Air Consumption ..... 22 SCFM
Socket Speed ..... 250 RPM	Weight ..... 3.8 lb

TABLE 1

COLLAR DRIVING HEX (Matches Socket Hex)	PIN RECESS HEX (Matches Super-Key Hex)	COMPLETE DRIVER ASSY. PART NO. w/ HLS79 Series 2" Extended Socket
3/16	1/16	HLA1051-187-062T
7/32		HLA1051-218-062T
1/4		HLA1051-250-062T
9/32		HLA1051-281-062T
5/16		HLA1051-312-062T
11/32		HLA1051-343-062T
7/32		HLA1051-218-078T
1/4	5/64	HLA1051-250-078T
9/32		HLA1051-281-078T
5/16		HLA1051-312-078T
11/32		HLA1051-343-078T
3/8		HLA1051-375-078T
5/16	3/32	HLA1051-312-094T
11/32		HLA1051-343-094T
3/8		HLA1051-375-094T
7/16		HLA1051-437-094T

TABLE 2

COLLAR DRIVING HEX (Matches Socket Hex)	PIN RECESS HEX (Matches Super-Key Hex)	COMPLETE DRIVER ASSY. PART NO. w/ HLS80 Series 4" Extended Socket
3/16	1/16	HLA1051-187X-062T
7/32		HLA1051-218X-062T
1/4		HLA1051-250X-062T
9/32		HLA1051-281X-062T
5/16		HLA1051-312X-062T
11/32		HLA1051-343X-062T
7/32		HLA1051-218X-078T
1/4	5/64	HLA1051-250X-078T
9/32		HLA1051-281X-078T
5/16		HLA1051-312X-078T
11/32		HLA1051-343X-078T
3/8		HLA1051-375X-078T
5/16	3/32	HLA1051-312X-094T
11/32		HLA1051-343X-094T
3/8		HLA1051-375X-094T
7/16		HLA1051-437X-094T

HLG101

Gear Housing Assembly

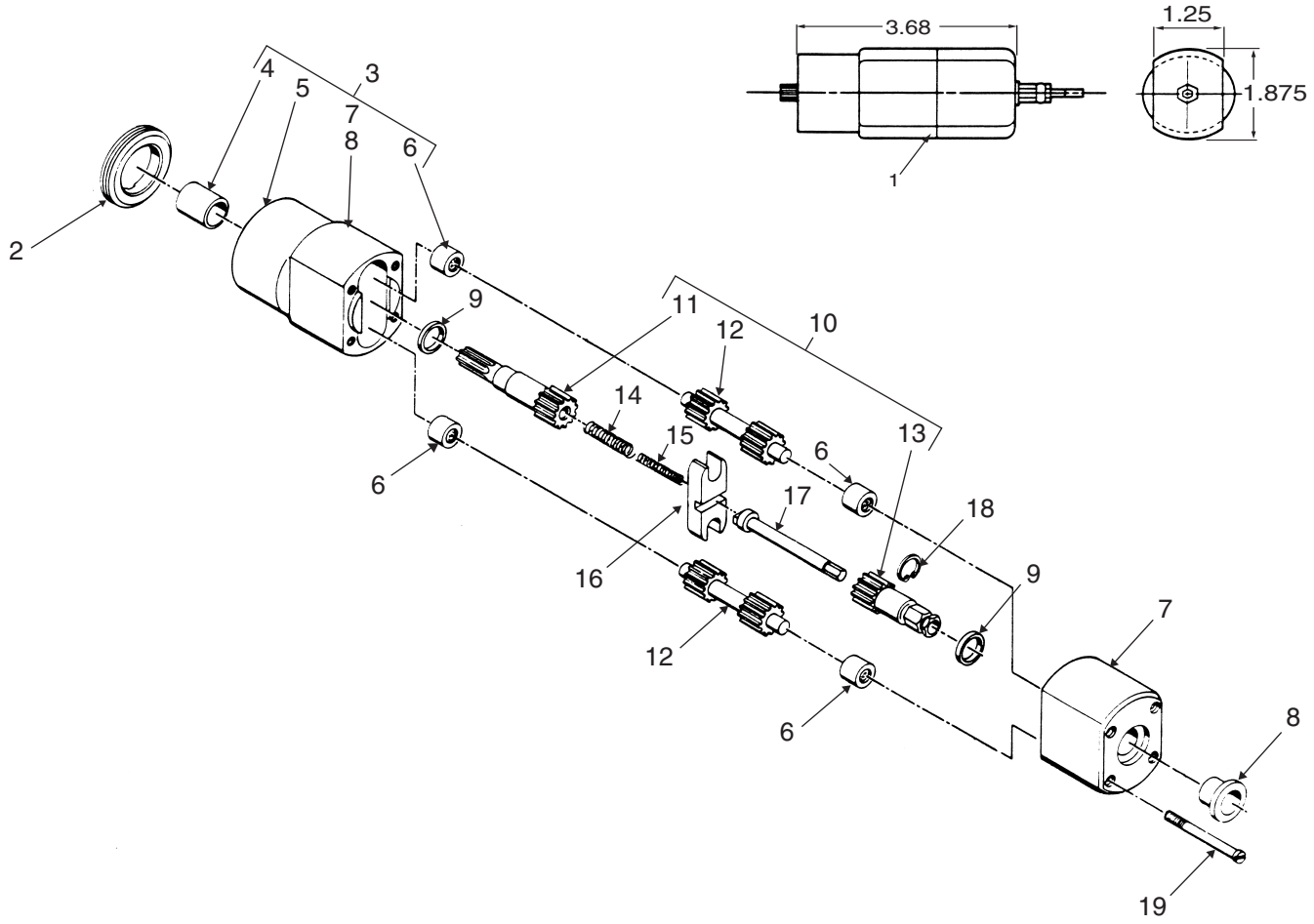

ITEM	PART NUMBER	DESCRIPTION	QTY
1	HLG101	Gear housing assy.	1
2	HLB112	. Nut, jam	1
2a	8-32 x 3/16 long	. Set screw (use on parts prior to 1-01-2002)	2
3	HLB184	. Housing assy.	1
4	Boston B68-5	. . Bearing, bronze oil impregnated (press fit)	1
5	HLB184-5	. . Housing, rear	1
6	B45	. . Bearing (Torrington)	4
7	HLB184-3	. . Housing, front	1
8	HLB185	. . Bearing (press fit)	1
9	HLB181	. Washer, thrust	2
10	HLB63	. Spur gear assy.	1
11	HLB464	. . Gear, rear spur	1
12	HLB465	. . Gear, center spur	2
13	HLB466	. . Gear, socket drive	1
14	HLB182	. Spring	1
15	HLB183	. Spring	1
16	HLB178	. Guide plate	1
17	HLB180	. Extension	1
18	HLB186	. Retaining ring	1
19	AN500-6-24	. Screw	4

Hi-Shear Corporation
2600 Skypark Dr. Torrance, CA 90509 USA
tel 310.326.8110 • Tool Div. fax 310.784.4270

HLG101
GEAR HOUSING ASSEMBLY

SUPER HLA1066

Offset Driver Assembly with Clutch, Extended Socket and Super-Key™ (T-Series)

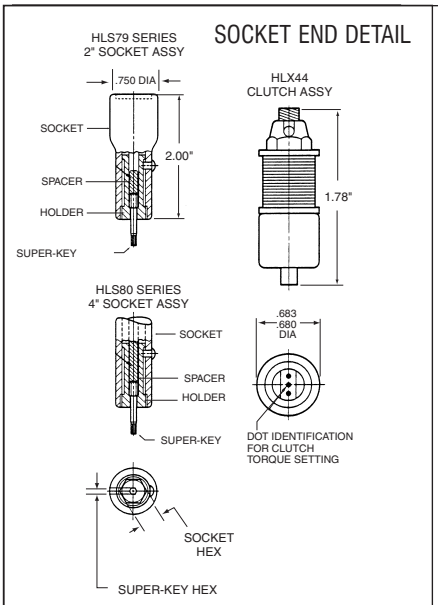

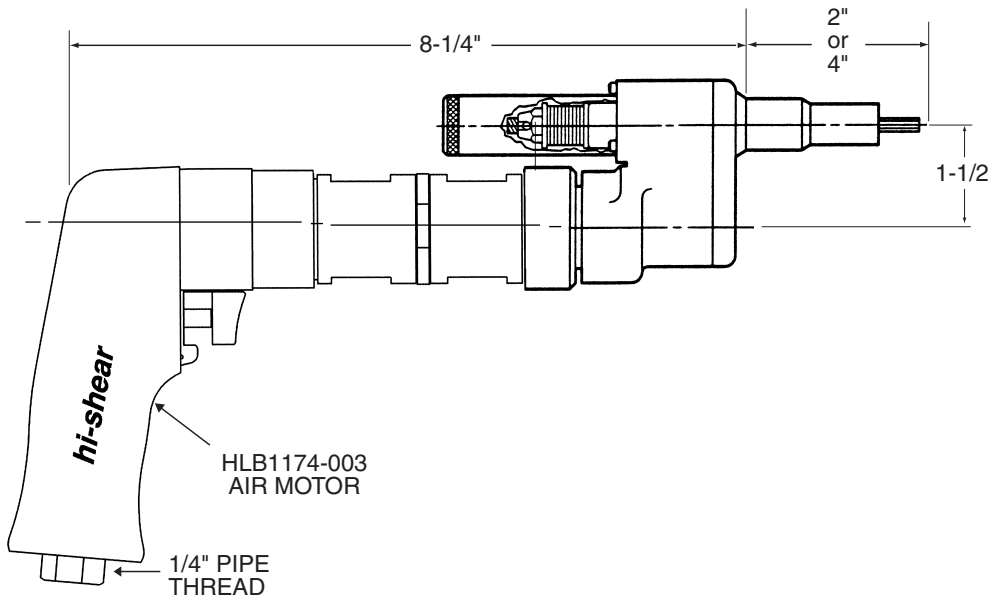

DRIVER BASIC PART NO. — SOCKET HEX REF. TABLE 1 — SOCKET LENGTH: X = 4.0", NO LETTER = 2.0" — SUPER-KEY HEX REF. TABLE 1. — SUPER-KEY (T-SERIES)

HLA1066-312(X)-078T

Example: complete driver assy. part no.

ORDERING INFORMATION

1. Match pin and collar hexes with Super-Key Hex and Socket Hex.
2. See table 1 for corresponding complete driver assy part no.

TECHNICAL DATA

Operating Pressure ..... 90 PSIA	Horsepower Rating 0.70
MAX. TORQUE RATING ..... 300 in. lb (Motor) @90 PSIA	Air Consumption ..... 22 SCFM
Socket Speed ..... 250 RPM	Weight ..... 3.8 lb

TABLE 1

COLLAR DRIVING HEX (Matches Socket Hex)	PIN RECESS HEX (Matches Super-Key Hex)	COMPLETE DRIVER ASSY. PART NO. WITH HLS79 SERIES 2" EXTENDED SOCKET	COMPLETE DRIVER ASSY. PART NO. WITH HLS80 SERIES 4" EXTENDED SOCKET	B DIA.	HLAX4 CLUTCH ASSEMBLIES PART NO.	HLAX4 CLUTCH ASSEMBLIES DOT IDENTIFICATION	HLAX4 CLUTCH ASSEMBLIES TORQUE SETTING
1/4	1/16	HLA1066-250-062T	HLA1066-250X-062T	0.468	HLXA4-5	•	8-10 IN. LB
9/32		HLA1066-281-062T	HLA1066-281X-062T	0.468			
5/16		HLA1066-312-062T	HLA1066-312X-062T	0.500			
11/32		HLA1066-343-062T	HLA1066-343X-062T	0.500			
1/4	5/64	HLA1066-250-078T	HLA1066-250X-078T	0.468	HLXA4-6	• •	18-20 IN. LB
9/32		HLA1066-281-078T	HLA1066-281X-078T	0.468			
5/16		HLA1066-312-078T	HLA1066-312X-078T	0.500			
11/32		HLA1066-343-078T	HLA1066-343X-078T	0.500			
3/8		HLA1066-375-078T	HLA1066-375X-078T	0.550			
5/16	3/32	HLA1066-312-094T	HLA1066-312X-094T	0.500	HLXA4-8	• • •	30-32 IN. LB
11/32		HLA1066-343-094T	HLA1066-343X-094T	0.500			
3/8		HLA1066-375-094T	HLA1066-375X-094T	0.550			
7/16		HLA1066-437-094T	HLA1066-437X-094T	0.625			

HLU4

Offset Driver Assembly
with Clutch, Extended Socket
and Super-Key™ (T-Series)

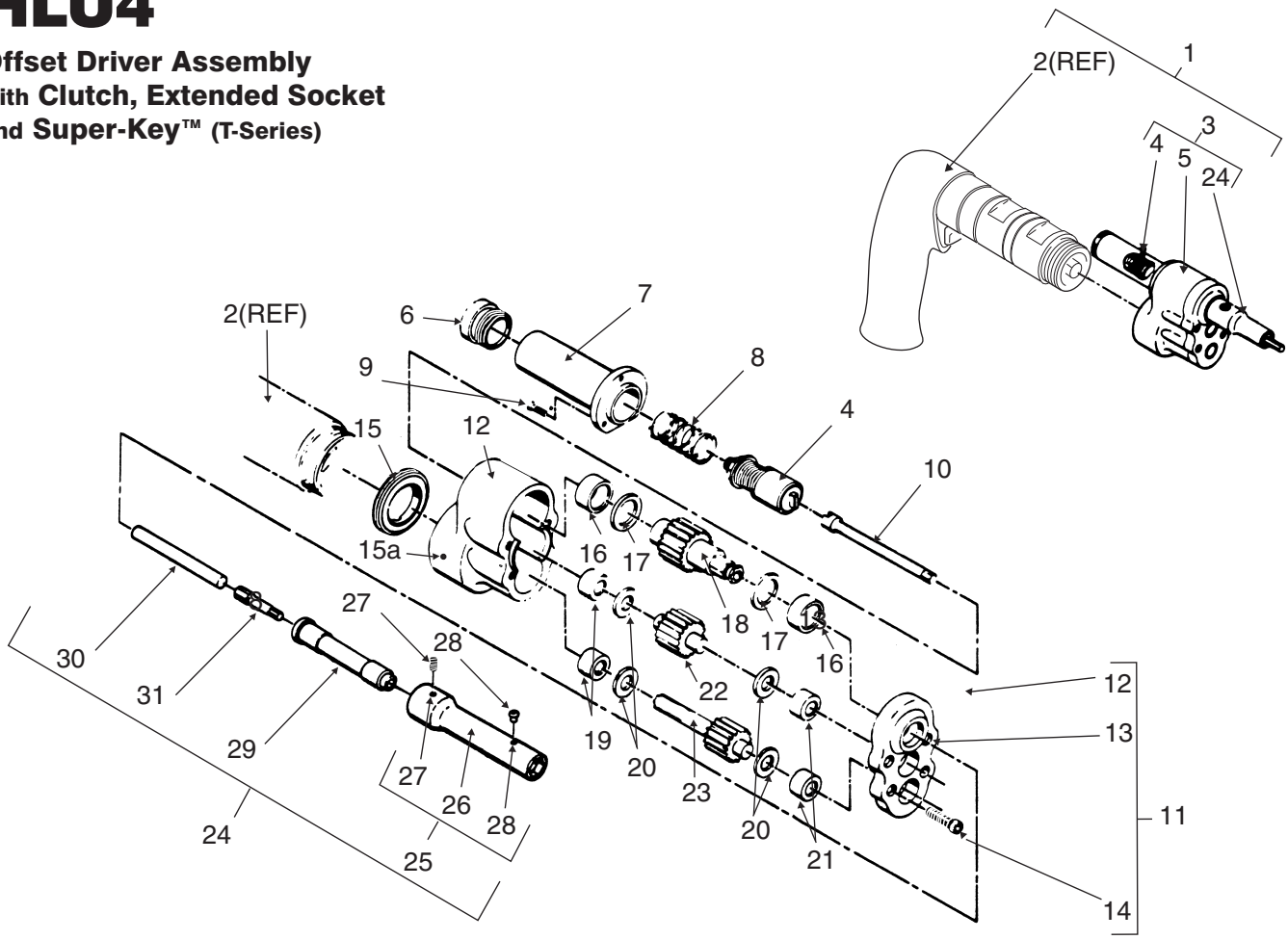

ITEM	PART NO.	DESCRIPTION	QTY HLS79 SERIES 2" EXT. SOCKET	QTY HLS80 SERIES 4" EXT. SOCKET	ITEM	PART NO.	DESCRIPTION	QTY HLS79 SERIES 2" EXT. SOCKET	QTY HLS80 SERIES 4" EXT. SOCKET
1	HLA1066-( )-( )T	Tool assy. (ref.)	1		18	HLB117	. . . Gear, socket drive	1	1
1	HLA1066-( )X-( )T	Tool assy. (ref.)		1	19	B55	. . . Bearing (Torrington)	2	2
2	HLB1174-003	. Air motor assy. (ref.)	1	1	20	19658	. . . Washer, thrust	4	4
3	HLU4-( )-( )T	. Driver assy.	1		21	M551	. . . Bearing (Torrington)	2	2
3	HLU4-( )X-( )T	. Driver assy.		1	22	HLB119	. . . Gear, idler	1	1
4	HLXA4-( ) see table 1	. . Clutch assy.	1	1	23	HLB120	. . . Gear, drive shaft	1	1
5	HLG105	. . Gear housing assy	1	1	24	HLS79-( )-( )T	. . Socket assy.	1	
6	HLB115	. . . Clutch cap	1	1	24	HLS80-( )-( )T	. . Socket assy.		1
7	HLB116	. . . Sleeve assy	1	1	25	HLS23-( )	. . . Socket sub-assy.	1	
8	HLB114	. . . Spring	1	1	25	HLS24-( )	. . . Socket sub-assy.		1
9	4-40 UNC x 3/8 lg	. . . Screw, soc hd cap	3	3	26	965050-( )	. . . . Socket	1	
10	HLB118	. . . Clutch shaft	1	1	26	965052-( )	. . . . Socket		1
11	HLB121	. . . Housing assy.	1	1	27	8-32 x 3/16 lg.	. . . . Set screw, Nylok	1	1
12	Not sold separately	. . . . Housing, rear	1	1	28	6-32 x 5/32 lg.	. . . . Screw, btn hd cap	1	1
13	Not sold separately	. . . . Housing, front	1	1	29	HLB1653-( )	. . . Holder	1	
14	6-32 UNC x 5/8 lg	. . . . Screw, soc hd	4	4	29	HLB1638-( )	. . . Holder		1
15	HLB112*	. . . Nut, jam	1	1	30	HLB1616H	. . . Spacer	1	
15a	8-32 x 3/16 long*	. . . Set screw, nylon tip	2	2	30	HLB1616J	. . . Spacer		1
16	B85	. . . Bearing (Torrington)	2	2	31	HLT140K-( )	. . . Super-Key	1	1
17	19659	. . . Washer, thrust	2	2					

*use on parts after 1/01/02

Hi-Shear Corporation
2600 Skypark Dr. Torrance, CA 90509 USA
tel 310.326.8110 • Tool Div. fax 310.784.4270

OFFSET DRIVER ASSEMBLY
with Clutch, Extended Socket & Super-Key™ (T-Series)

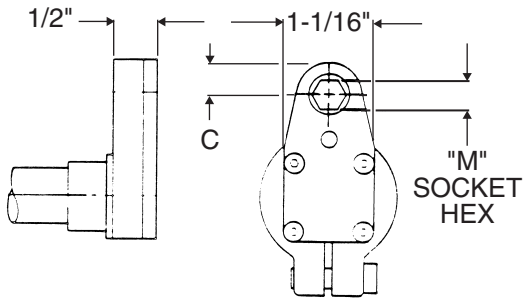

HLG115H OFFSET ADAPTOR ASSY W/THRU-HEX SOCKET
(Finder pin & leaf spring not included)

INSTALLATION TOOLING

SUPER HLA1071

1 Inch Offset Driver Assembly
with Interference Fit Flush Socket

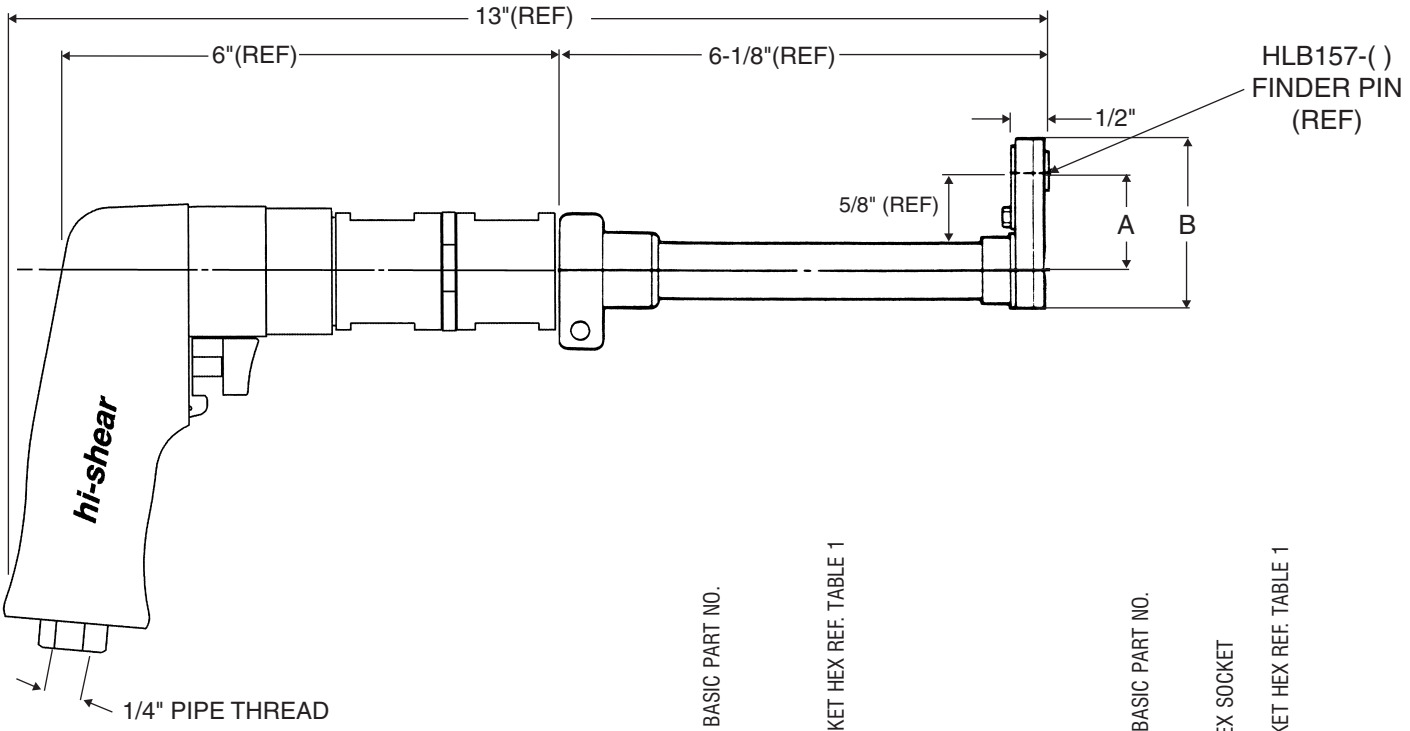

ORDERING INFORMATION

1. Determine collar driving hex dimensions of the fasteners to be installed.
2. See table 1 for 'M'socket hex to match collar driving hex dimensions. Determine complete tool assembly part no. (Example 1).
3. See table 2 for complete tool assembly part nos. to obtain an Offset Adaptor Assembly featuring a thru-hex socket, less finder pin and leaf spring.
4. See example 2.

Example 1: complete driver assy.

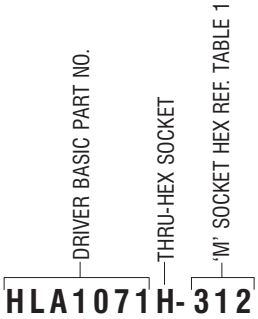

Example 2: complete driver assy. part no. w/ thru-hex socket

TECHNICAL DATA

Operating Pressure ..... 90 PSIA	Horsepower Rating 0.70
MAX. TORQUE RATING ..... 300 in. lb (Motor) @90 PSIA	Air Consumption ..... 22 SCFM
Socket Speed ..... 250 RPM	Weight ..... 3.8 lb

				TABLE 1				TABLE 2		
COLLAR Hex Size	A C to C	B OVERALL	C EDGE DISTANCE	"M" SOCKET HEX (Matches Collar Driving Hex)	COMPLETE TOOL ASSY. PART NO.	OFFSET ADAPTOR ASSY. PART NO. (REF.)	OFFSET ADAPTOR ASSY. PART NO. (REF.)	"M" SOCKET HEX (Matches Collar Driving Hex)	COMPLETE TOOL ASSY. PART NO.	OFFSET ADAPTOR ASSY. PART NO. (REF.)
up to 3/8	1.375	2.330	0.431	5/16	HLA1071-312	HLG115-312	HLB157-312	5/16	HLA1071H-312	HLG115H-312
7/16 and up	1.420	2.450	0.500	11/32	HLA1071-343	HLG115-343	HLB157-343	11/32	HLA1071H-343	HLG115H-343
				3/8	HLA1071-375	HLG115-375	HLB157-375	3/8	HLA1071H-375	HLG115H-375
				7/16	HLA1071-437	HLG115-437	HLB157-437	7/16	HLA1071H-437	HLG115H-437

HLG115

1" Offset Adaptor Assembly
with Interference Fit Flush Socket

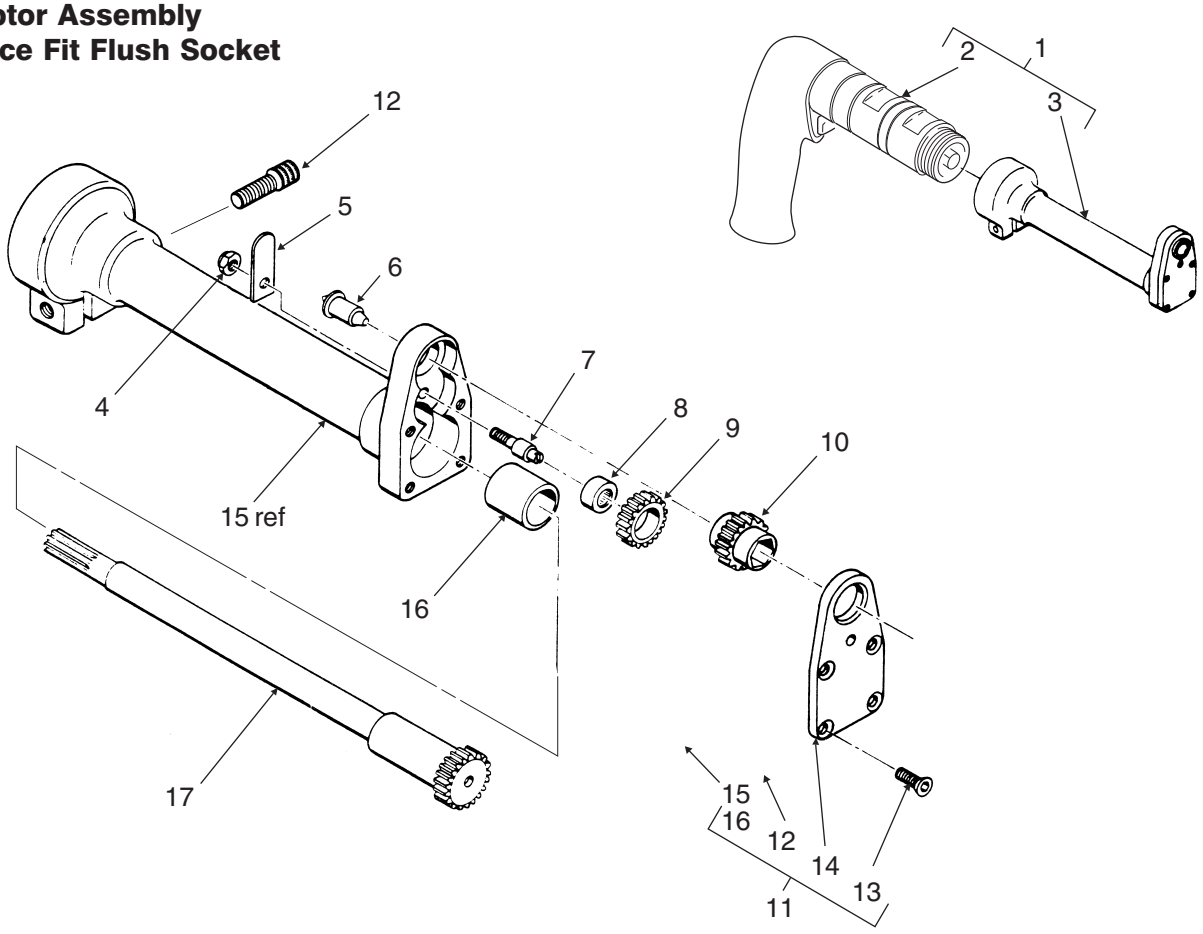

ITEM	PART NO.	DESCRIPTION	QTY HLB167 SERIES	QTY HLB167H SERIES THRU-HEX SOCKET
1	HLA1071-( )	Tool assy., complete	1	
1	HLA1071H-( )	Tool assy., complete		1
2	HLB1174-003	. Air motor assy.	1	1
3	HLG115-( )	. Offset adaptor assy.	1	
3	HLG115H-( )	. Offset adaptor assy.		1
4	AN364-632C	. . Nut, hex	1	
5	HLB162-8	. . Spring, leaf	1	
6	HLB157-( )	. . Pin, finder	1	
7	HLB105	. . Shaft, intermediate	1	1
8	B34	. . Bearing (Torrington)	1	1
9	HLB106-7	. . Gear, intermediate	1	
10	HLB167-( ) **Table 3** **(-11 for .437 socket)**	. . Gear, socket	2	
10	HLB167H-( ) **Table 4** **(-11 for .437 socket)**	. . Gear, socket		1
12	1/4-28 x 5/8 lg.	. . . Capscrew, socket head	1	1
13	6/32 x 3/8 lg.	. . . Screw, countersunk - 82o	4	4
14	HLB171 **(HLB172 for .437 socket)**	. . . Cover plate	1	1
15	HLB168-5 **(-11 for .437 socket)**	. . . Housing assy.	1	1
16	B810-5	. . . . Bushing (Boston Gear)	1	1
17	HLB103-5	. . Gear, drive	1	1

TABLE 3

SOCKET GEAR

HEX SIZE (Matches Collar Driving Hex)	PART NO.
5/16	HLB167-312
11/32	HLB167-343
3/8	HLB167-375
7/16	HLB167-437

TABLE 4

SOCKET

HEX SIZE (Matches Collar Driving Hex)	PART NO.
5/16	HLB167H-312
11/32	HLB167H-343
3/8	HLB167H-375
7/16	HLB167H-437

Hi-Shear Corporation
2600 Skypark Dr. Torrance, CA 90509 USA
tel 310.326.8110 • Tool Div. fax 310.784.4270

HLG115
1" OFFSET ADAPTOR ASSEMBLY with Interference Fit Flush Socket

INSTALLATION TOOLING

SUPER HLA1072

1 Inch Offset Driver Assembly with Thin Flush Socket and Super-Key™ (T-Series)

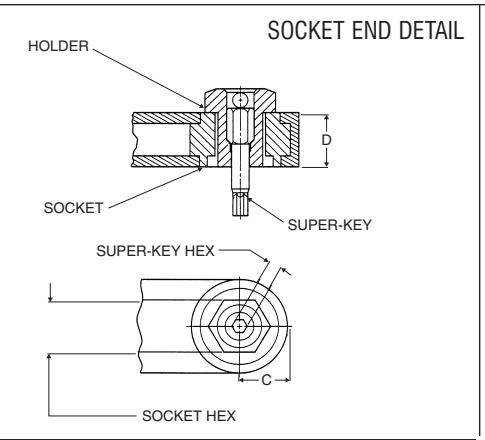

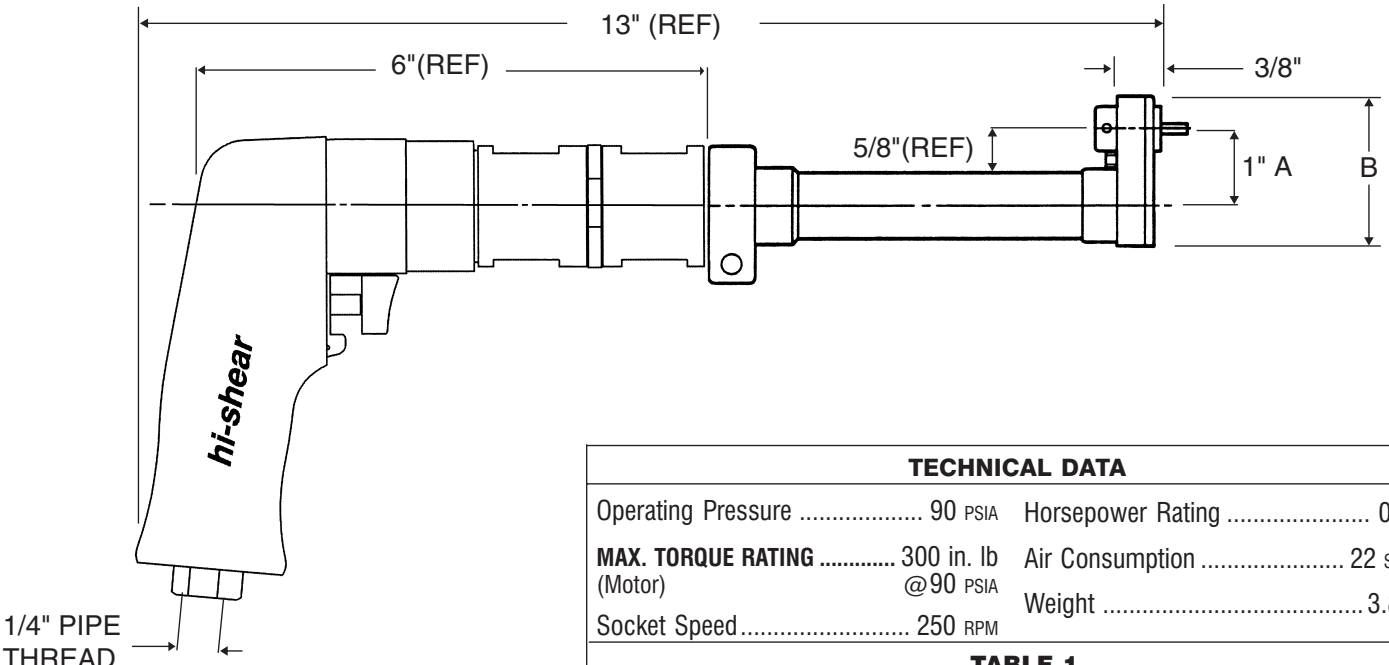

TECHNICAL DATA

Operating Pressure ..... 90 PSIA	Horsepower Rating 0.70
MAX. TORQUE RATING ..... 300 in. lb (Motor) @90 PSIA	Air Consumption ..... 22 SCFM
Socket Speed ..... 250 RPM	Weight ..... 3.8 lb

DRIVER BASIC PART NO. — SOCKET HEX (REF TABLE) — SUPER-KEY HEX (REF TABLE) — SUPER-KEY (T-SERIES)

HLA1072 - 312 - 078 -T

Example: complete driver assy. part no.

ORDERING INFORMATION

1. Match pin and collar hexes with Super-Key Hex and Socket Hex.
2. See table for corresponding complete driver assy part no.

COLLAR Hex Size	A C to C	B OVERALL	C EDGE DISTANCE	D WIDTH
up to 3/8	1.375	2.338	0.437	0.375
7/16 and up	1.420	2.418	0.470	0.375

TABLE 1

COLLAR DRIVING HEX (Matches Socket Hex)	PIN RECESS HEX (Matches Super-Key Hex)	COMPLETE DRIVER ASSY	OFFSET ADAPTOR & SOCKET ASSY
3/16	1/16	HLA1072-187-062T	HLG137-187-062T
7/32		HLA1072-218-062T	HLG137-218-062T
1/4		HLA1072-250-062T	HLG137-250-062T
9/32		HLA1072-281-062T	HLG137-281-062T
5/16		HLA1072-312-062T	HLG137-312-062T
11/32		HLA1072-343-062T	HLG137-343-062T
7/32	5/64	HLA1072-218-078T	HLG137-218-078T
1/4		HLA1072-250-078T	HLG137-250-078T
9/32		HLA1072-281-078T	HLG137-281-078T
5/16		HLA1072-312-078T	HLG137-312-078T
11/32		HLA1072-343-078T	HLG137-343-078T
3/8		HLA1072-375-078T	HLG137-375-078T
6/16	3/32	HLA1072-312-094T	HLG137-312-094T
11/32		HLA1072-343-094T	HLG137-343-094T
3/8		HLA1072-375-094T	HLG137-375-094T
7/16		HLA1072-437-094T	HLG137-437-094T
3/8	1/8	HLA1072-375-125T	HLG137-375-125T
7/16		HLA1072-437-125T	HLG137-437-125T

HLG137

1 Inch Offset Adaptor Assembly with Thin Flush Socket and Super-Key™ (T-series)

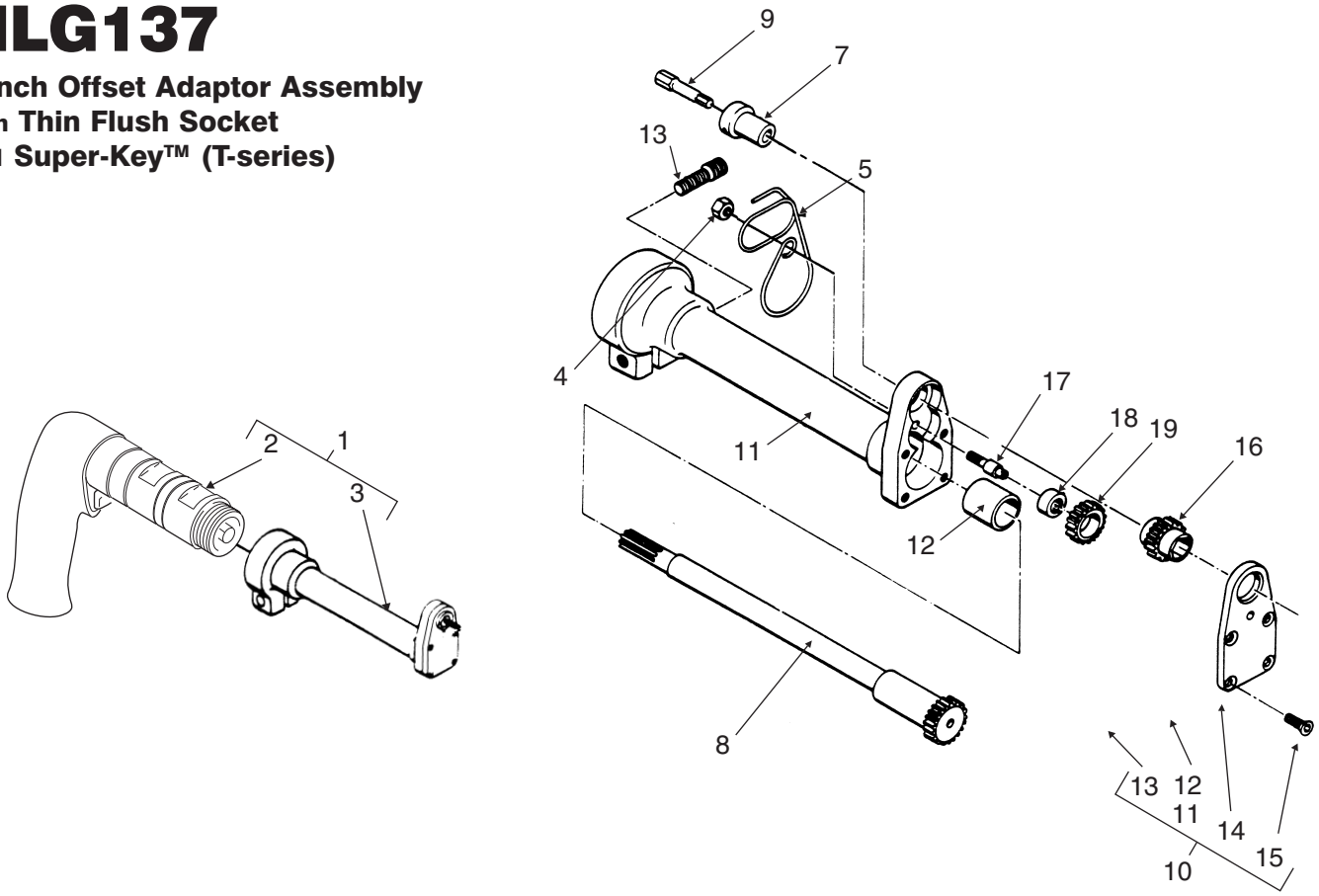

ITEM	PART NO.	DESCRIPTION	QTY
1	HLA1072-( )-( )T	Tool assy., complete	1
2	HLB1174-003	. Air motor assy.	1
3	HLG137-( )-( )T	. Offset adaptor and socket assy.	1
4	AN364-632C	. . Nut, hex	1
5	HLB1476-(3)	. . Spring, ejector	1
5a	HLB1437-(5)	. . Spring, ejector	1
	(-5 for .437 socket size)		
6	HLB106-7	. . Gear, intermediate	1
7	HLB138-( )	. . Holder	1
8	HLB103-5	. . Gear, drive	1
9	HLT140K-( )	. . Super-Key	1
	See Table 3		
10	HLB209-3	. . Housing assy., complete	1
	(-5 for .437 socket size)		
11	HLB210-3	. . . Housing sub-assy.	1
	(-5 for .437 socket size)		
12	B810-5	. . . . Bushing (Boston Gear)	1
13	1/4-28 x 5/8 lg.	. . . Cap screw, socket head	1
14	HLB211	. . . Cover	1
	(or HLB212 for .437 size)		
15	82º x 6-32 x 5/16lg	. . . Screw, countersunk, flat head	4
16	HLB1348-( )	. . Socket	1
	See Table 2		
17	HLB208-3	. . Shaft, intermediate	1
18	B34	. . Bearing (Torrington)	1
19	HLB106-11	. . Gear, Intermediate	1

TABLE 2

SOCKET

HEX SIZE (Matches Collar Driving Hex)	PART NO.
3/16	HLB1348-187
7/32	HLB1348-218
1/4	HLB1348-250
9/32	HLB1348-281
5/16	HLB1348-312
11/32	HLB1348-343
3/8	HLB1348-375
7/16	HLB1348-437

TABLE 3

SUPER-KEY

HEX SIZE (Matches Pin Recess Hex)	PART NO.
1/16	HLT140K-062
5/64	HLT140K-078
3/32	HLT140K-094
1/8	HLT140K-125

Hi-Shear Corporation
2600 Skypark Dr. Torrance, CA 90509 USA
tel 310.326.8110 • Tool Div. fax 310.784.4270

HLG137
1 INCH OFFSET ADAPTOR ASSEMBLY with Thin Flush Socket & Super-Key™ (T-series)

SUPER HLA1076

2 Inch Offset Driver Assembly with Multi-Length Socket and Super-Key™ (T-Series)

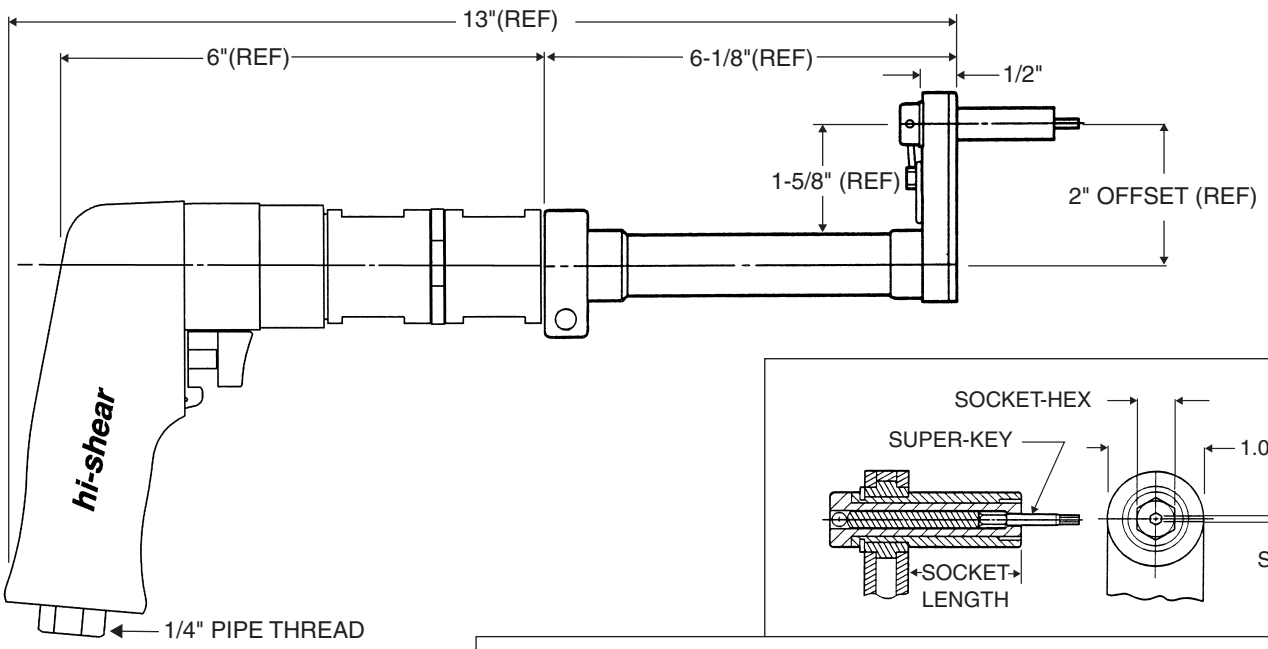

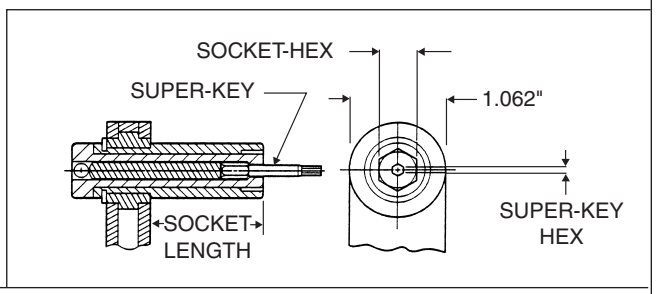

TECHNICAL DATA

Operating Pressure	90 PSIA	Horsepower Rating	0.70
MAX. TORQUE RATING (Motor)	300 in. lb @90 PSIA	Air Consumption	22 SCFM
Socket Speed	250 RPM	Weight	3.8 lb

DRIVER BASIC PART NO. — SOCKET HEX REF. TABLE 1 — SOCKET LENGTH CODE (REF TABLE 2) — SUPER-KEY HEX REF. TABLE 1. — SUPER-KEY (T-SERIES)

HLA1076-312(E)-078T

Example: complete driver assy. part no.

ORDERING INFORMATION

1. Match pin and collar hexes with Super-Key Hex and Socket Hex.
2. See table 1 for corresponding complete driver assy part no.
2. See table 2 for SOCKET LENGTH CODES

TABLE 2

A = 0.50	E = 0.75
B = 1.00	F = 1.75
C = 1.50	X = 4.00
D = 2.00	

TABLE 1

COLLAR DRIVING HEX (Matches Socket Hex)	PIN RECESS HEX (Matches Super-Key Hex)	COMPLETE DRIVER ASSY. PART NO.	OFFSET ADAPTOR & SOCKET ASSY. PART NO.	EXTENDED SOCKET ASSY. PART NO.
3/16	1/16	HLA1076-187( )-062T	HLG321-187( )-062T	HLS76-187( )-062T
7/32		HLA1076-218( )-062T	HLG321-218( )-062T	HLS76-218( )-062T
1/4		HLA1076-250( )-062T	HLG321-250( )-062T	HLS76-250( )-062T
9/32		HLA1076-281( )-062T	HLG321-281( )-062T	HLS76-281( )-062T
5/16		HLA1076-312( )-062T	HLG321-312( )-062T	HLS76-312( )-062T
11/32		HLA1076-343( )-062T	HLG321-343( )-062T	HLS76-343( )-062T
7/32	5/64	HLA1076-218( )-078T	HLG321-218( )-078T	HLS76-218( )-062T
1/4		HLA1076-250( )-078T	HLG321-250( )-078T	HLS76-250( )-062T
9/32		HLA1076-281( )-078T	HLG321-281( )-078T	HLS76-281( )-062T
5/16		HLA1076-312( )-078T	HLG321-312( )-078T	HLS76-312( )-062T
11/32		HLA1076-343( )-078T	HLG321-343( )-078T	HLS76-343( )-062T
3/8		HLA1076-375( )-078T	HLG321-375( )-078T	HLS76-375( )-062T
5/16		HLA1076-312( )-094T	HLG321-312( )-094T	HLS76-312( )-062T
11/32		HLA1076-343( )-094T	HLG321-343( )-094T	HLS76-343( )-062T
3/8	3/32	HLA1076-375( )-094T	HLG321-375( )-094T	HLS76-375( )-062T
7/16		HLA1076-437( )-094T	HLG321-437( )-094T	HLS76-437( )-062T
3/8	1/8	HLA1076-375( )-125T	HLG321-375( )-125T	HLS76-375( )-062T
7/16		HLA1076-437( )-125T	HLG321-437( )-125T	HLS76-437( )-062T

HLG321

1 Inch Offset Adaptor Assembly
with Thin Flush Socket
and Super-Key™(T-series)

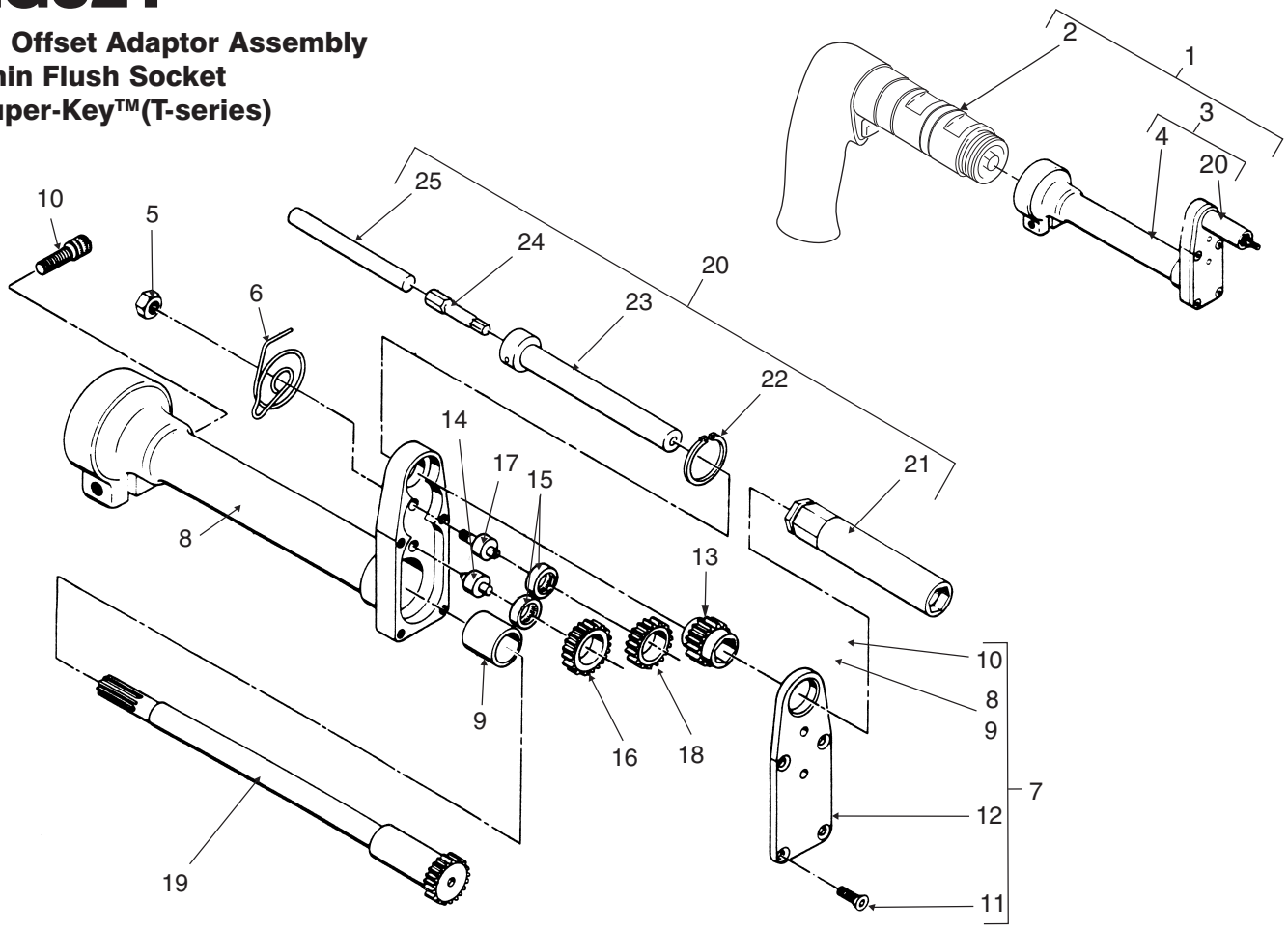

ITEM	PART NO.	DESCRIPTION	QTY
1	HLA1076-( )-( )T	Tool assy., complete	1
2	HLB1174-005	. Air motor assy.	1
3	HLG321-( )( )-( )T	. Offset adaptor and socket assy.	1
4	HLG321	. . Offset adaptor assy.	1
5	AN364-632C	. . . Nut, hex	1
6	HLB1475-5	. . . Spring, ejector	1
7	HLB169-13	. . . Housing assy., complete	1
8	HLB168-13	. . . . Housing sub-assy.	1
9	B810-5	. . . . . Bushing	1
10	1/4-28 x 5/8 lg.	. . . . Cap screw, socket head	1
11	6-32 x 3/8 lg.	. . . . Screw, countersunk - 82°	4
12	HLB174	. . . . Plate, cover	1
13	HLB23-437	. . . Gear, socket - 7/16 thru hex	1
14	HLB159	. . . Shaft, no. 2 intermediate	1
15	B34	. . . Bearing (Torrington)	2
16	HLB106-11	. . . Gear, no. 2 intermediate	1
17	HLB105	. . . Shaft, no. 1 intermediate	1
18	HLB106-11	. . . Gear, no. 1 intermediate	1
19	HLB103-5	. . . Gear, drive	1
20	HLS76-( )( )-( )T	. . Socket assy., extended	1
21	HLS47-( )( )	. . . Socket (see Table 3)	1
22	5100-50	. . . Retaining ring	1
23	HLB1665-( )( )	. . . Holder	1
24	HLT140K-( )	. . . Super-Key (see Table 4)	1
25	HLB1616-( )	. . . Spacer	1

TABLE 3

SOCKET

HEX SIZE (Matches Collar Driving Hex)	PART NO.
3/16	HLS47-187( )
7/32	HLS47-218( )
1/4	HLS47-250( )
9/32	HLS47-281( )
5/16	HLS47-312( )
11/32	HLS47-343( )
3/8	HLS47-375( )
7/16	HLS47-437( )

TABLE 4

SUPER-KEY

HEX SIZE (Matches Pin Recess Hex)	PART NO.
1/16	HLT140K-062
5/64	HLT140K-078
3/32	HLT140K-094
1/8	HLT140K-125

Hi-Shear Corporation
2600 Skypark Dr. Torrance, CA 90509 USA
tel 310.326.8110 • Tool Div. fax 310.784.4270

SUPER HLA1079

2 Inch Offset Driver Assembly with Thin Flush Socket and Super-Key™ (T-Series)

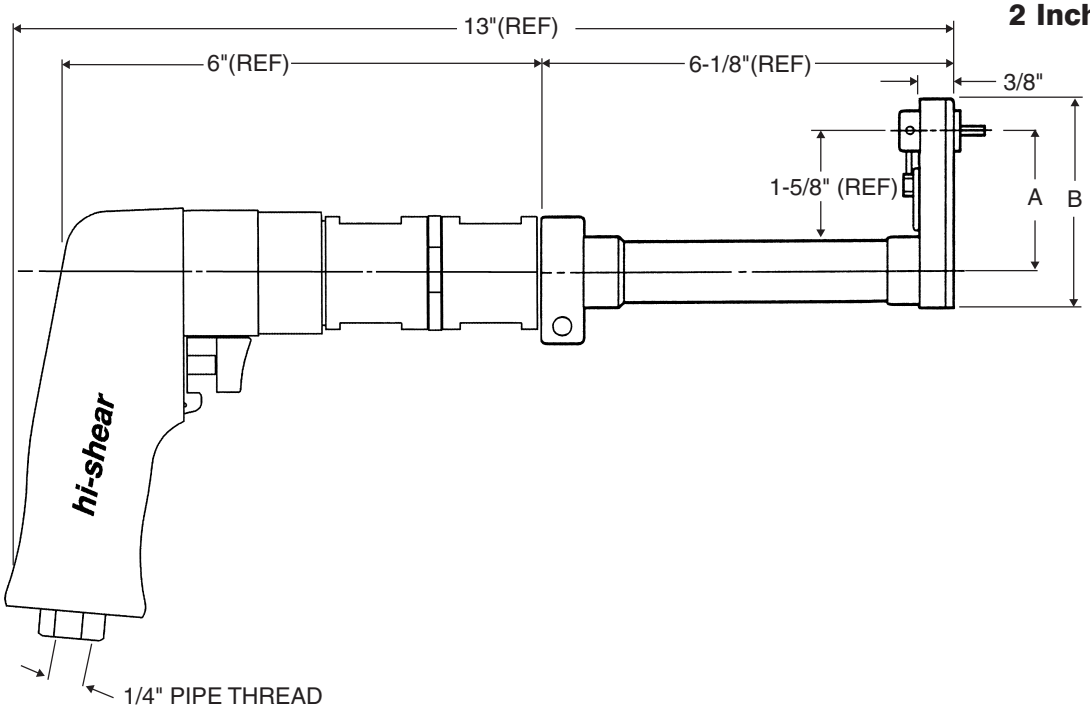

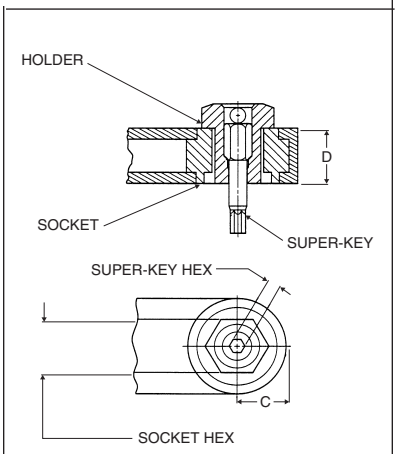

TECHNICAL DATA

Operating Pressure ..... 90 PSIA	Horsepower Rating 0.70
MAX. TORQUE RATING ..... 300 in. lb (Motor) @90 PSIA	Air Consumption ..... 22 SCFM
Socket Speed ..... 250 RPM	Weight ..... 3.8 lb

DRIVER BASIC PART NO. — SOCKET HEX REF. TABLE 1 — SUPER-KEY HEX REF. TABLE 1 — SUPER-KEY (T-SERIES)

HLA1079 - 312 - 078 - T

Example: complete driver assy. part no.

ORDERING INFORMATION

1. Match pin and collar hexes with Super-Key Hex and Socket Hex.
2. See table 1 for corresponding complete driver assy part no.

COLLAR Hex Size	A C to C	B OVERALL	C EDGE DISTANCE	D WIDTH
up to 3/8	2.210	3.175	0.431	0.375
7/16 and up	2.250	3.254	0.470	0.375

TABLE 1

COLLAR DRIVING HEX (Matches Socket Hex)	PIN RECESS HEX (Matches Super-Key Hex)	COMPLETE DRIVER ASSY.	OFFSET ADAPTOR & SOCKET ASSY.
3/16	1/16	HLA1079-187-062T	HLG148-187-062T
7/32		HLA1079-218-062T	HLG148-218-062T
1/4		HLA1079-250-062T	HLG148-250-062T
9/32		HLA1079-281-062T	HLG148-281-062T
5/16		HLA1079-312-062T	HLG148-312-062T
11/32		HLA1079-343-062T	HLG148-343-062T
7/32	5/64	HLA1079-218-078T	HLG148-218-078T
1/4		HLA1079-250-078T	HLG148-250-078T
9/32		HLA1079-281-078T	HLG148-281-078T
5/16		HLA1079-312-078T	HLG148-312-078T
11/32		HLA1079-343-078T	HLG148-343-078T
3/8		HLA1079-375-078T	HLG148-375-078T
5/16	3/32	HLA1079-312-094T	HLG148-312-094T
11/32		HLA1079-343-094T	HLG148-343-094T
3/8		HLA1079-375-094T	HLG148-375-094T
7/16		HLA1079-437-094T	HLG148-437-094T
3/8	1/8	HLA1079-375-125T	HLG148-375-125T
7/16		HLA1079-437-125T	HLG148-437-125T

HLG148

2 Inch Offset Adaptor Assembly with Thin Flush Socket and Super-key™ (T-series)

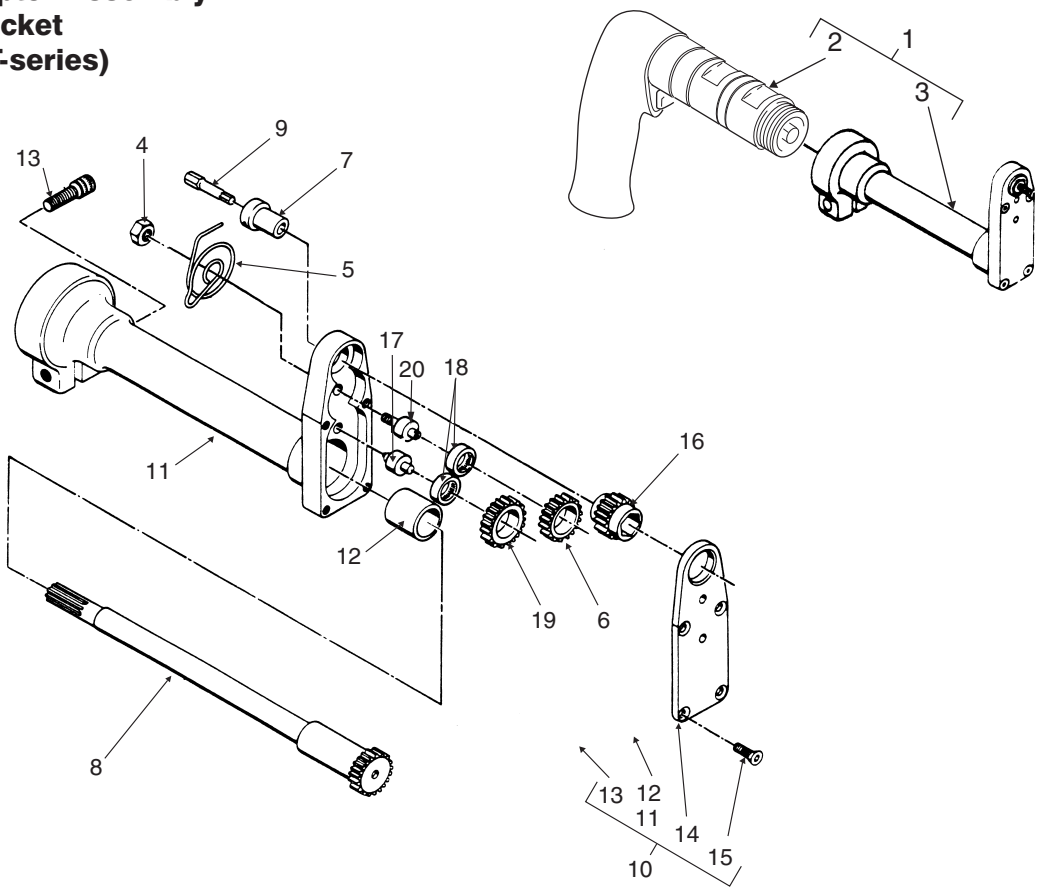

ITEM	PART NO.	DESCRIPTION	QTY
1	HLA1079-( )-( )T	Tool assy., complete	1
2	HLB1174-005	. Air motor assy.	1
3	HLG148-( )-( )T	. Offset adaptor and socket assy.	1
4	AN364-632C	. . Nut, hex	1
5	HLB1475-5	. . Spring, ejector	1
6	HLB106-11	. . Gear, no. 1 intermediate	1
7	HLB138-( )-( )	. . Holder	1
8	HLB103-5	. . Gear, drive	1
9	HLT140K-( )	. . Super-Key (see Table 3)	1
10	HLB209-7	. . Housing assy., complete	1
	(-9 for .437 socket size)		
11	HLB210-7	. . . Housing assy.	1
	(-9 for .437 socket size)		
12	B810-5	. . . . Bushing (Boston Gear)	1
13	1/4-28 x 5/8 lg.	. . . Cap screw, socket head	1
14	6-32 x 5/16 lg.	. . . Screw, countersunk - 82°	4
15	HLB224	. . . Plate, cover	1
	(HLB225 for .437 size)		
16	HLB1348-( )	. . Socket (see Table 2)	1
17	HLB226	. . Shaft, no. 1 intermediate	1
18	B34	. . Bearing (Torrington)	2
19	HLB106-11	. . Gear, no. 2 intermediate	1
20	HLB208-3	. . Shaft, no. 2 intermediate	1

TABLE 2

SOCKET

HEX SIZE (Matches Collar Driving Hex)	PART NO.
3/16	HLB1348-187
7/32	HLB1348-218
1/4	HLB1348-250
9/32	HLB1348-281
5/16	HLB1348-312
11/32	HLB1348-343
3/8	HLB1348-375
7/16	HLB1348-437

TABLE 3

SUPER-KEY

HEX SIZE (Matches Pin Recess Hex)	PART NO.
1/16	HLT140K-062
5/64	HLT140K-078
3/32	HLT140K-094
1/8	HLT140K-125

Hi-Shear Corporation
2600 Skypark Dr. Torrance, CA 90509 USA
tel 310.326.8110 • Tool Div. fax 310.784.4270

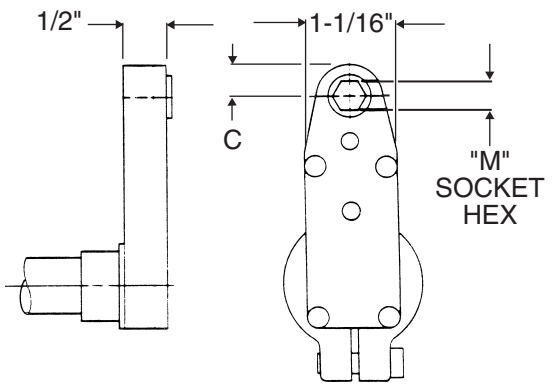

HLG125H OFFSET ADAPTER ASSY WITH
THRU-HEX SOCKET, LESS FINDER PIN AND LEAF SPRING

INSTALLATION TOOLING

SUPER HLA1084

2 Inch Offset Driver Assembly
with Interference Fit Flush Socket

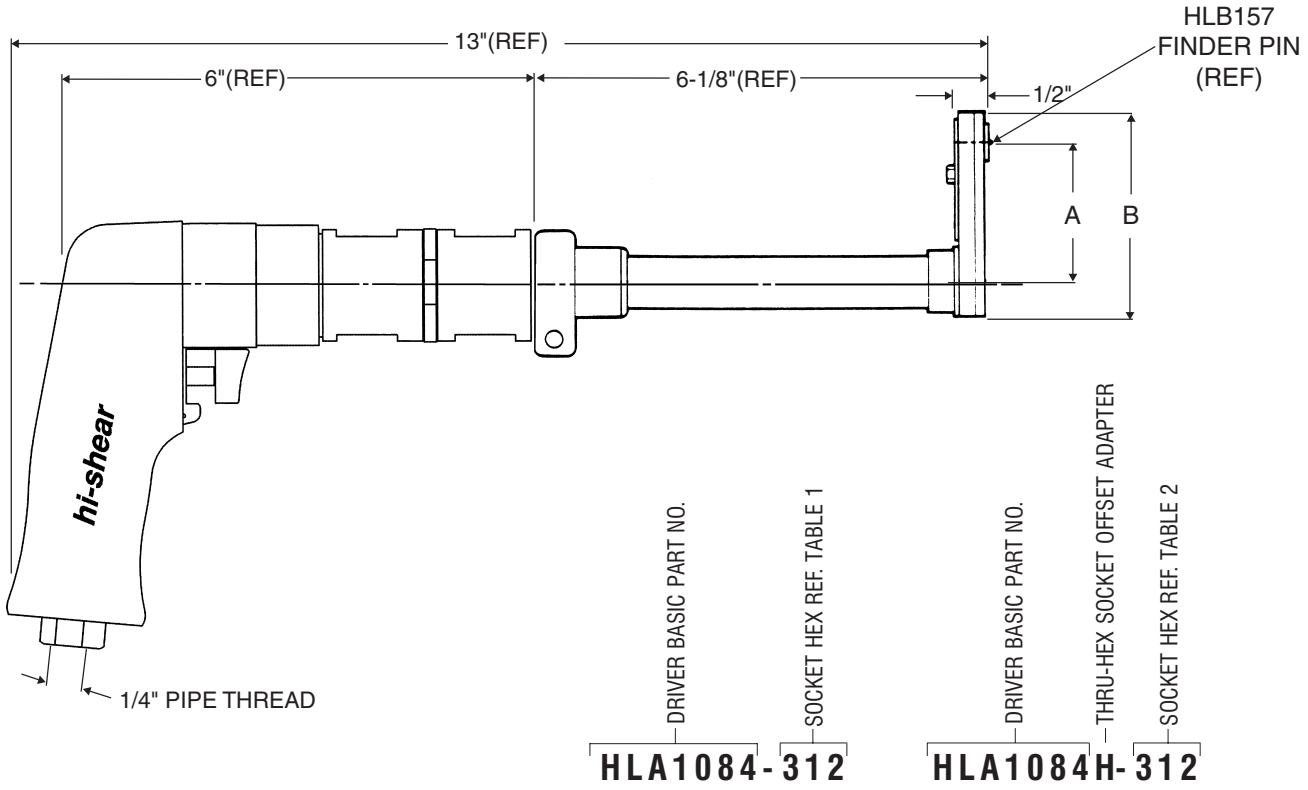

ORDERING INFORMATION

1. Match pin and collar hexes with Super-Key Hex and Socket Hex.
2. See tables 1 & 2 for corresponding complete driver assy part no.

TECHNICAL DATA

Operating Pressure ..... 90 PSIA	Horsepower Rating 0.70
MAX. TORQUE RATING ..... 300 in. lb (Motor) @90 PSIA	Air Consumption ..... 22 SCFM
Socket Speed ..... 250 RPM	Weight ..... 3.8 lb

					TABLE 1				TABLE 2		
SOCKET SIZE	A C to C	B OVERALL	C EDGE DISTANCE	D WIDTH	"M" SOCKET HEX (Matches Collar Driving Hex)	COMPLETE TOOL ASSY. PART NO.	OFFSET ADAPTOR ASSY. PART NO. (REF)	FINDER PIN PART NO.	"M" SOCKET HEX (Matches Collar Driving Hex)	COMPLETE TOOL ASSY. PART NO.	OFFSET ADAPTOR ASSY. PART NO. (REF)
up to 3/8	2.210	3.182	0.431	0.500	1/4	HLA1084-250	HLG125-250	HLB157-250	1/4	HLA1084H-250	HLG125H-250
7/16 and up	2.250	3.283	0.500	0.500	5/16	HLA1084-312	HLG125-312	HLB157-312	5/16	HLA1084H-312	HLG125H-312
					11/32	HLA1084-343	HLG125-343	HLB157-343	11/32	HLA1084H-343	HLG125H-343
					7/16	HLA1084-437	HLG125-437	HLB157-437	7/16	HLA1084H-437	HLG125H-437

HLG125

2 Inch Offset Adaptor Assembly
With Interference Fit Flush Socket

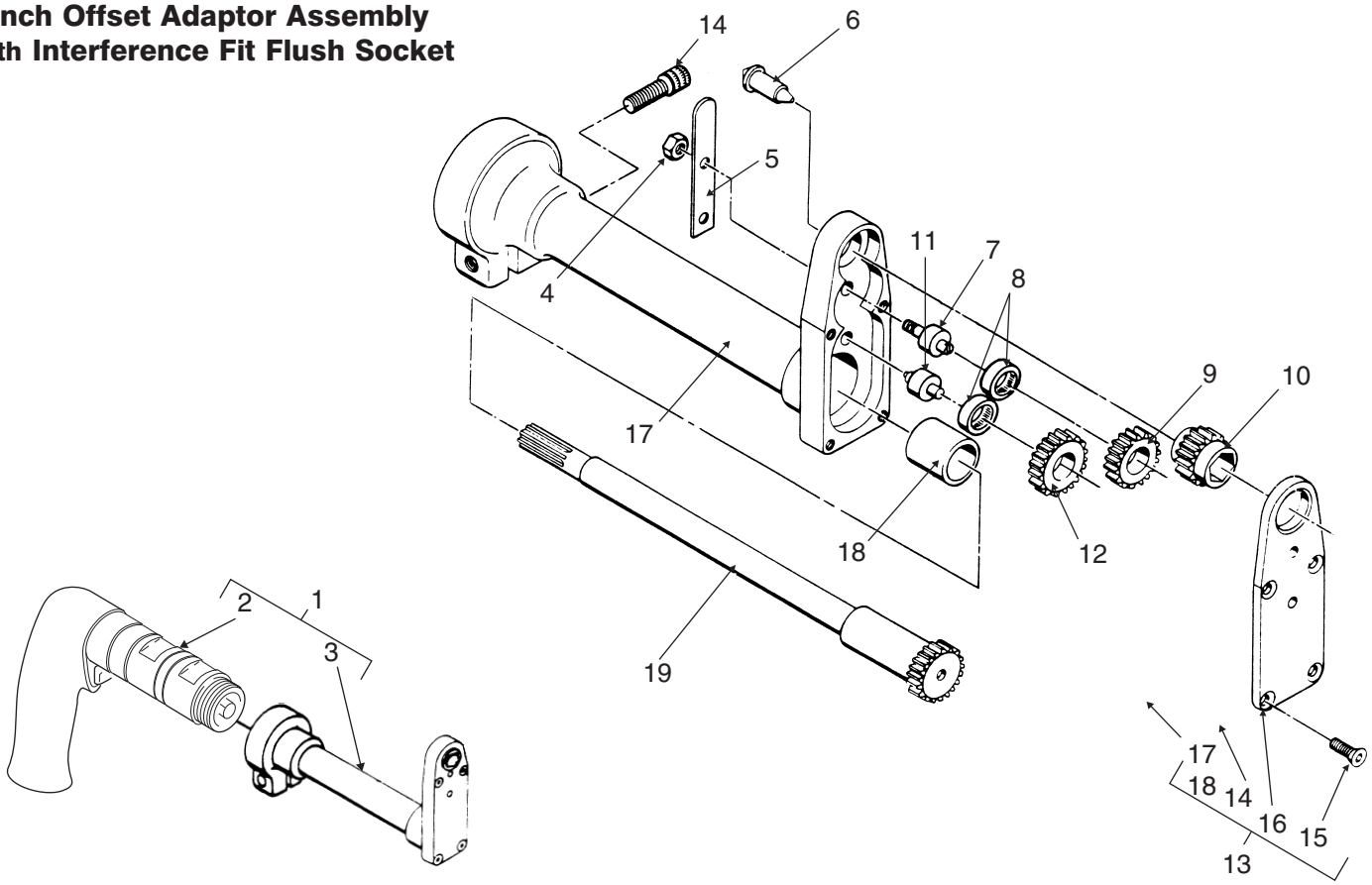

ITEM	PART NO.	DESCRIPTION	QTY	PART NO.	QTY
1	HLA1084-( )	Tool assy., complete	1	HLA1084H-( )	1
2	HLB1174-005	. Air motor assy.	1	HLB1174-005	1
3	HLG125-( )	. Offset adaptor assy.	1	HLG125H-( )	1
4	AN364-632C	. . Nut, hex	1	AN364-632C	1
5	HLB153-8	. . Spring, leaf	1	--	0
6	HLB157-( )	. . Pin, finder	1	--	0
7	HLB105	. . Shaft, intermediate, no. 2	1	HLB105	1
8	B34	. . Bearing (Torrington)	2	B34	2
9	HLB106-11	. . Gear, intermediate, no. 2	1	HLB106-11	1
10	HLB167-( ) **Table 3**	. . Gear, socket	1	HLB167H-( ) **Table 4**	1
11	HLB159	. . Shaft, intermediate, no. 1	1	HLB159	1
12	HLB106-11	. . Gear, intermediate, no. 1	1	HLB106-11	1
13	HLB169-9	. . Housing assy., complete	1	HLB169-9	1
	(-13 for .437 socket)			**(-13 for .437 socket)**	
14	1/4-28 x 5/8 lg.	. . . Capscrew, socket head	1	1/4-28 x 5/8 lg.	1
15	6-32 x 3/8 lg.	. . . Screw, countersunk-82°	4	6-32 x 3/8 lg.	4
16	HLB173	. . . Cover, plate	1	HLB173	1
	(HLB174 for .437 socket)			**(HLB174 for .437 socket)**	
17	HLB168-9	. . . Housing sub-assy.	1	HLB168-9	1
	(-13 for .437 socket)			**(-13 for .437 socket)**	
18	B810-5	. . . . Bushing (Boston Gear)	1	B810-5	1
19	HLB103-5	. . Gear, drive	1	HLB103-5	1

TABLE 3

SOCKET GEAR

HEX SIZE (Matches Collar Driving Hex)	PART NO.
1/4	HLB167-250
5/16	HLB167-312
11/32	HLB167-343
7/16	HLB167-437

TABLE 4

SOCKET GEAR

HEX SIZE (Matches Collar Driving Hex)	PART NO.
1/4	HLB167H-250
5/16	HLB167H-312
11/32	HLB167H-343
7/16	HLB167H-437

Hi-Shear Corporation
2600 Skypark Dr. Torrance, CA 90509 USA
tel 310.326.8110 • Tool Div. fax 310.784.4270

HLG125
2 INCH OFFSET ADAPTOR ASSEMBLY with Interference Fit Flush Socket

SUPER HLA1086

2 Inch Offset Back Drive Driver Assembly with Extended Socket and Super-Key™ (T-Series)

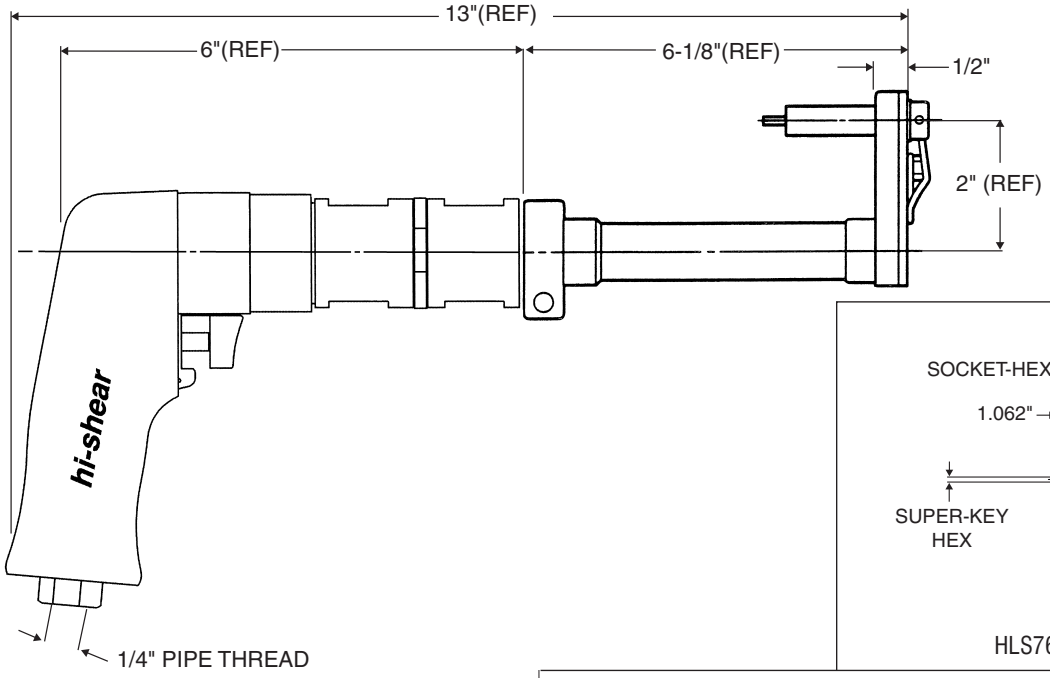

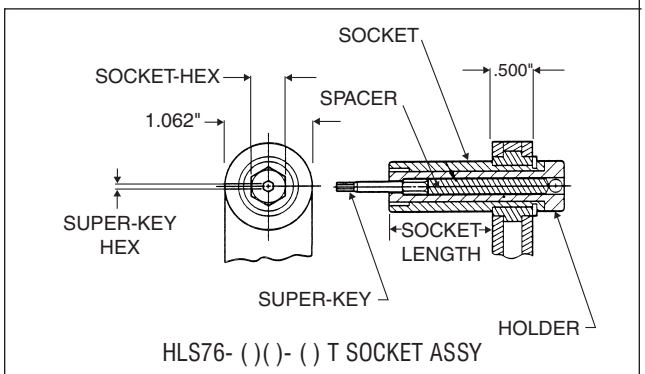

HLS76- ( )( )- ( ) T SOCKET ASSY

TECHNICAL DATA

Operating Pressure	90 PSIA	Horsepower Rating	0.70
MAX. TORQUE RATING (Motor)	300 in. lb @90 PSIA	Air Consumption	22 SCFM
Socket Speed	250 RPM	Weight	3.8 lb

DRIVER BASIC PART NO. | SOCKET HEX REF. TABLE 1 | SOCKET LENGTH (REF TABLE 2) | SUPER-KEY HEX (REF TABLE 1) | SUPER-KEY (T-SERIES)

HLA1086-312(A)-078-T

Example: complete driver assy. part no.

ORDERING INFORMATION

1. Match pin and collar hexes with Super-Key Hex and Socket Hex.
2. See table 1 for corresponding complete driver assy part no.

TABLE 2

A = 0.50	E = 0.75
B = 1.00	F = 1.75
C = 1.50	X = 4.00
D = 2.00	

TABLE 1

COLLAR DRIVING HEX (Matches Socket Hex)	PIN RECESS HEX (Matches Super-Key Hex)	COMPLETE DRIVER ASSY. PART NO.	OFFSET ADAPTOR & SOCKET ASSY. PART NO.	EXTENDED SOCKET ASSY. PART NO.
3/16	1/16	HLA1086-187( )-062T	HLG222-187( )-062T	HLS76-187( )-062T
7/32		HLA1086-218( )-062T	HLG222-218( )-062T	HLS76-218( )-062T
1/4		HLA1086-250( )-062T	HLG222-250( )-062T	HLS76-250( )-062T
9/32		HLA1086-281( )-062T	HLG222-281( )-062T	HLS76-281( )-062T
5/16		HLA1086-312( )-062T	HLG222-312( )-062T	HLS76-312( )-062T
11/32		HLA1086-343( )-062T	HLG222-343( )-062T	HLS76-343( )-062T
7/32	5/64	HLA1086-218( )-078T	HLG222-218( )-078T	HLS76-218( )-062T
1/4		HLA1086-250( )-078T	HLG222-250( )-078T	HLS76-250( )-062T
9/32		HLA1086-281( )-078T	HLG222-281( )-078T	HLS76-281( )-062T
5/16		HLA1086-312( )-078T	HLG222-312( )-078T	HLS76-312( )-062T
11/32		HLA1086-343( )-078T	HLG222-343( )-078T	HLS76-343( )-062T
3/8		HLA1086-375( )-078T	HLG222-375( )-078T	HLS76-375( )-062T
5/16		HLA1086-312( )-094T	HLG222-312( )-094T	HLS76-312( )-062T
11/32		HLA1086-343( )-094T	HLG222-343( )-094T	HLS76-343( )-062T
3/8	3/32	HLA1086-375( )-094T	HLG222-375( )-094T	HLS76-375( )-062T
7/16		HLA1086-437( )-094T	HLG222-437( )-094T	HLS76-437( )-062T
3/8	1/8	HLA1086-375( )-125T	HLG222-375( )-125T	HLS76-375( )-062T
7/16		HLA1086-437( )-125T	HLG222-437( )-125T	HLS76-437( )-062T

HLG222

2 Inch Offset Back Drive Adaptor Assembly with Extended Socket and Super-Key™ (T-Series)

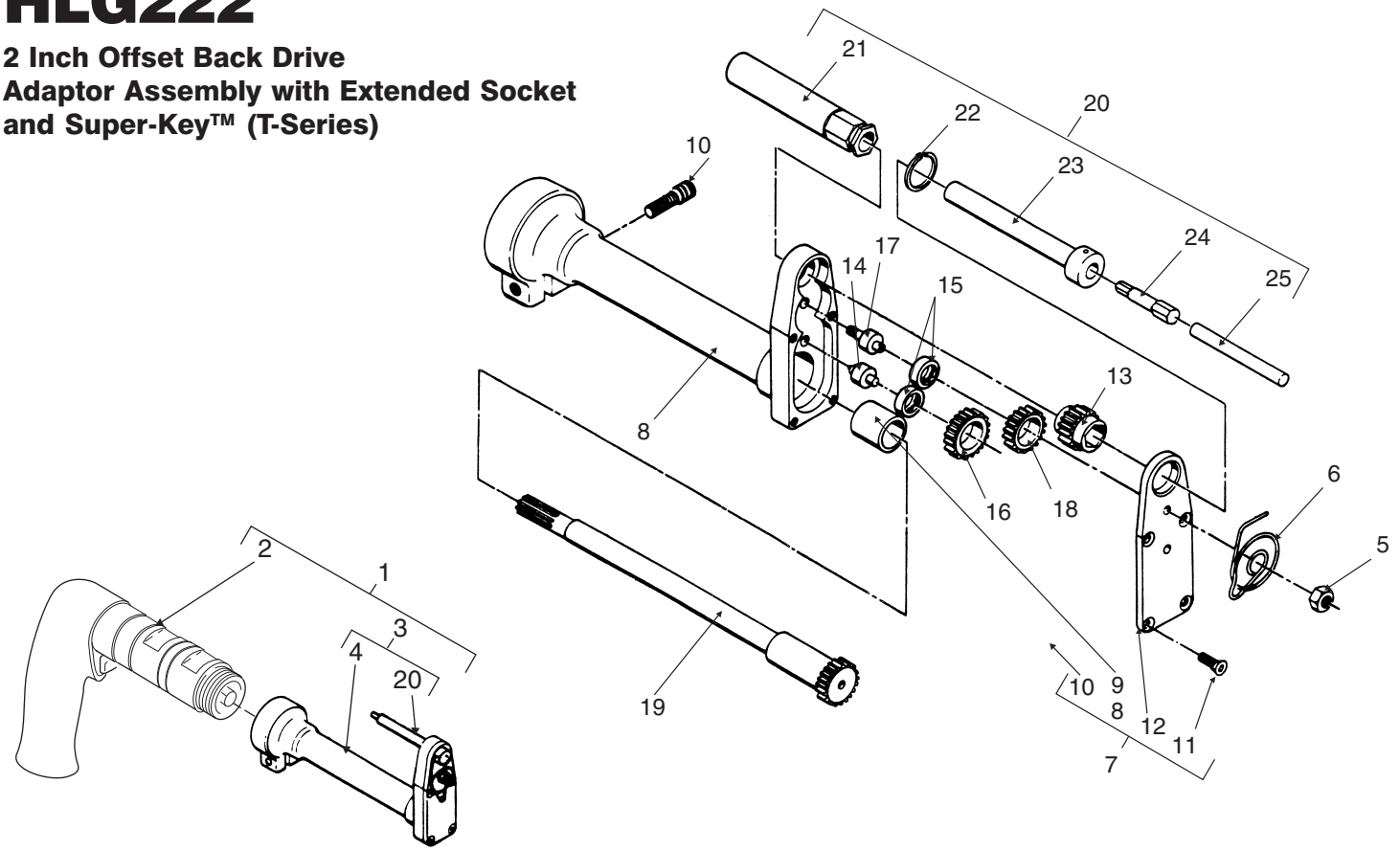

ITEM	PART NO.	DESCRIPTION	QTY
1	HLA1086-( )( )-( )T	Tool assy., complete	1
2	HLB1174-003	. Air motor assy.	1
3	HLG222-( )( )-( )T	. Offset adaptor and socket assy.	1
4	HLG223	. . Offset adaptor assy.	1
5	AN364-632C	. . . Nut, hex	1
6	HLB1475-5	. . . Spring, ejector	1
7	HLB169-13	. . . Housing assy., complete	1
8	HLB168-13	. . . . Housing sub-assy.	1
9	B810-5	. . . . . Bushing	1
10	1/4-28 x 5/8 lg.	. . . . Capscrew, socket head	1
11	6-32 x 3/8 lg.	. . . . Screw, countersunk-82°	4
12	HLB174	. . . . Plate, cover	1
13	HLB23-437	. . . Gear, socket, 7/16 thru hex	1
14	HLB159	. . . Shaft, intermediate, no. 2	1
15	B34	. . . Bearing (Torrington)	2
16	HLB106-11	. . . Gear, intermediate, no. 2	1
17	HLB105	. . . Shaft, intermediate, no. 1	1
18	HLB-106-11	. . . Gear, intermediate, no. 1	1
19	HLB103-5	. . . Gear, drive	1
20	HLS76-( )( )-( )T	. . Socket assy., extended	1
21	HLS47-( )( ) **Table 3**	. . . Socket	1
22	5100-50	. . . Ring, retaining	1
23	HLB1665-( )( )	. . . Holder	1
24	HLT140K-( ) **Table 4**	. . . Super-Key	1
25	HLB1616-( )	. . . Spacer	1

TABLE 3

SOCKET

HEX SIZE (Matches Collar Driving Hex)	PART NO.
3/16	HLS47-187( )
7/32	HLS47-218( )
1/4	HLS47-250( )
9/32	HLS47-281( )
5/16	HLS47-312( )
11/32	HLS47-343( )
3/8	HLS47-375( )
7/16	HLS47-437( )

TABLE 4

SUPER-KEY

HEX SIZE (Matches Pin Recess Hex)	PART NO.
1/16	HLT140K-062
5/64	HLT140K-078
3/32	HLT140K-094
1/8	HLT140K-125

Hi-Shear Corporation
2600 Skypark Dr. Torrance, CA 90509 USA
tel 310.326.8110 • Tool Div. fax 310.784.4270

HLG222
2 INCH OFFSET BACK DRIVE ADAPTOR ASSEMBLY with Extended Socket and Super-Key™ (T-Series)

SUPER HLA1097

4 Inch Offset Driver Assembly with Flush Socket and Super-Key™ (T-Series)

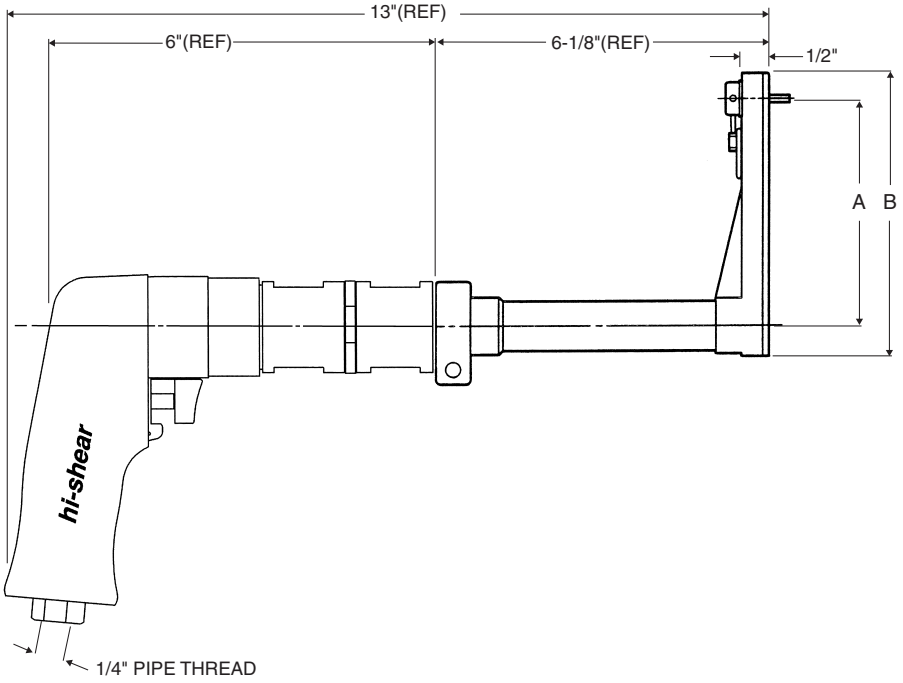

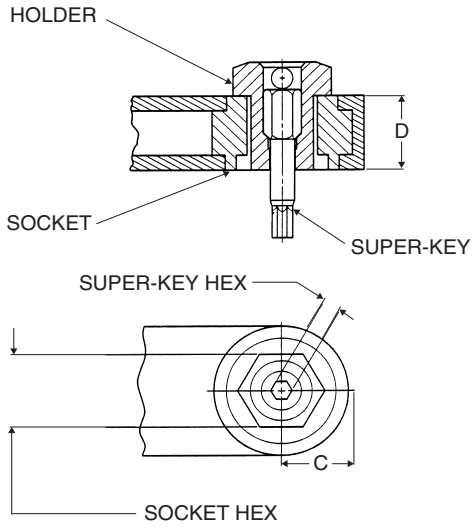

HLG168- ( )( )- ( ) T SOCKET ASSY

COLLAR Hex Size	A C to C	B OVERALL	C EDGE DISTANCE	D WIDTH
up to 11/32	4.470	5.502	0.450	0.500
3/8 and up	4.512	5.594	0.500	0.500

TECHNICAL DATA

Operating Pressure	90 PSIA	Horsepower Rating	0.70
MAX. TORQUE RATING (Motor)	300 in. lb @90 PSIA	Air Consumption	22 SCFM
Socket Speed	250 RPM	Weight	3.8 lb

DRIVER BASIC PART NO. — SOCKET HEX REF. TABLE 1 — SUPER-KEY HEX REF. TABLE 1 — SUPER-KEY HEX REF. TABLE 1

HLA1097 - 312 -078 T

Example: complete driver assy. part no.

ORDERING INFORMATION

1. Match pin and collar hexes with Super Key Hex and Socket Hex.
2. See table 1 for Complete Driver Assy Part No.

TABLE 1

COLLAR DRIVING HEX (Matches Socket Hex)	PIN RECESS HEX (Matches Super-Key Hex)	COMPLETE DRIVER ASSY.	OFFSET ADAPTOR & SOCKET ASSY.
3/16	1/16	HLA1097-187-062T	HLG168-187-062T
7/32		HLA1097-218-062T	HLG168-218-062T
1/4		HLA1097-250-062T	HLG168-250-062T
9/32		HLA1097-281-062T	HLG168-281-062T
5/16		HLA1097-312-062T	HLG168-312-062T
11/32		HLA1097-343-062T	HLG168-343-062T
7/32	5/64	HLA1097-218-078T	HLG168-218-078T
1/4		HLA1097-250-078T	HLG168-250-078T
9/32		HLA1097-281-078T	HLG168-281-078T
5/16		HLA1097-312-078T	HLG168-312-078T
11/32		HLA1097-343-078T	HLG168-343-078T
3/8		HLA1097-375-078T	HLG168-375-078T
5/16	3/32	HLA1097-312-094T	HLG168-312-094T
11/32		HLA1097-343-094T	HLG168-343-094T
3/8		HLA1097-375-094T	HLG168-375-094T
7/16		HLA1097-437-094T	HLG168-437-094T
3/8	1/8	HLA1097-375-125T	HLG168-375-125T
7/16		HLA1097-437-125T	HLG168-437-125T

HLG168

4 inch Offset Adaptor Assembly with Flush Socket and Super-Key™ (T-Series)

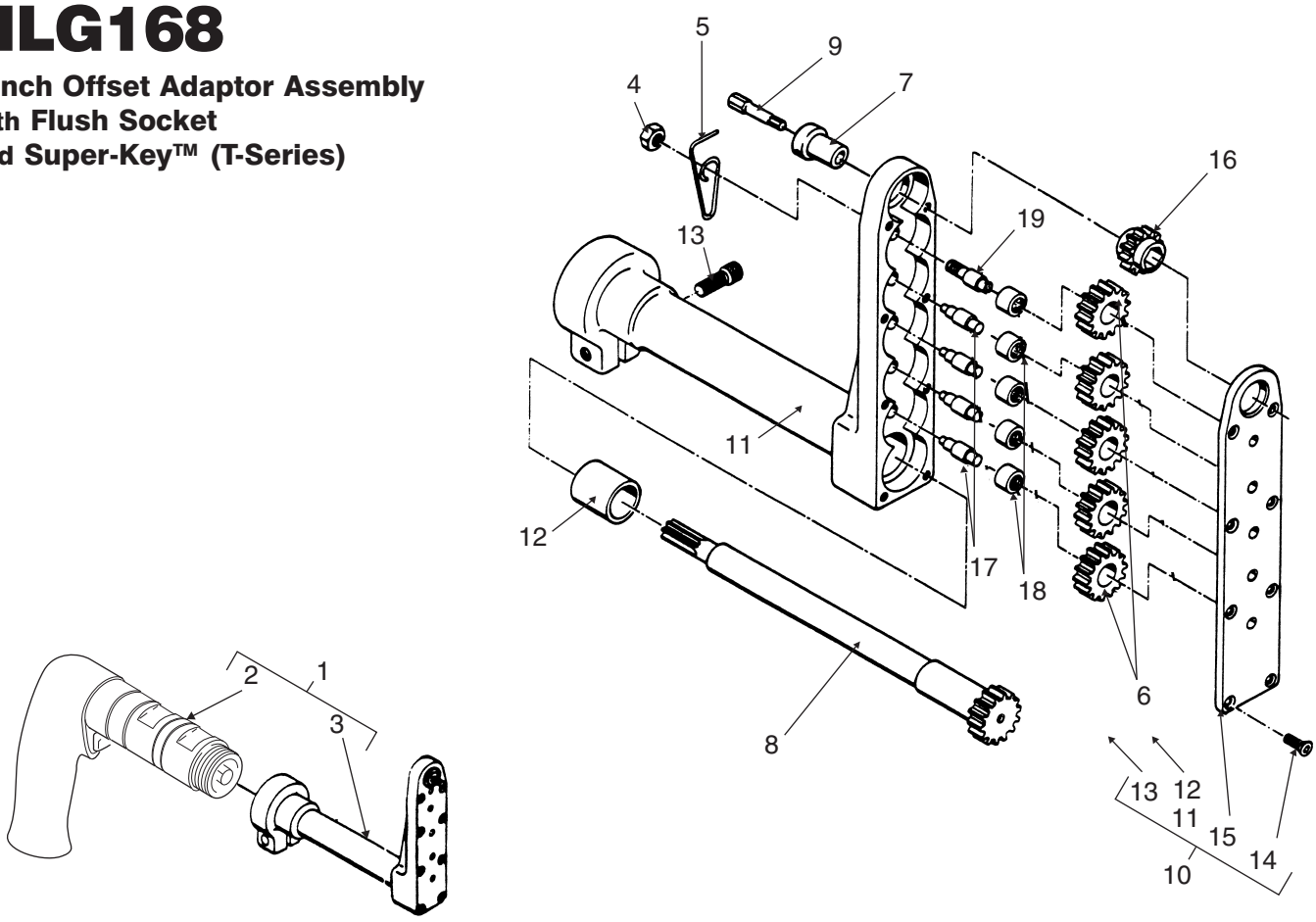

ITEM	PART NO.	DESCRIPTION	QTY
1	HLA1097-( )-( )T	Tool assy., complete	1
2	HLB1174-003	. Air motor assy.	1
3	HLG168-( )-( )T	. Offset adaptor and socket assy.	1
4	AN364-632C	. . Nut, hex	1
5	HLB213-8	. . Spring, ejector	1
	(-10 for .375 and .437)		
6	HLB106-11	. . Gear, intermediate	5
7	HLB1484-( )	. . Holder	1
8	HLB103-5	. . Gear, drive	1
9	HLT140K-( ) Table 3	. . Super-Key	1
10	HLB219-5	. . Housing assy., complete	1
	(-7 for .375 and .437)		
11	HLB220-5	. . . Housing sub-assy.	1
	(-7 for .375 and .437)		
12	B810-5	. . . . Bushing (Boston Gear)	1
13	1/4-28 x 5/8 lg.	. . . Capscrew, socket head	1
14	6-32 x 3/8 lg.	. . . Screw, countersunk, flat head-82°	8
15	HLB177-5	. . . Plate, cover	1
	(-7 for .375 and .437)		
16	HLB1574-( ) Table 2	. . Socket	1
17	HLB159	. . Shaft, intermediate, no. 1	4
18	B34	. . Bearing (Torrington)	5
19	HLB105	. . Shaft, intermediate, no. 2	1

TABLE 2

SOCKET

HEX SIZE (Matches Collar Driving Hex)	PART NO.
3/16	HLB1574-187
7/32	HLB1574-218
1/4	HLB1574-250
9/32	HLB1574-281
5/16	HLB1574-312
11/32	HLB1574-343
3/8	HLB1574-375
7/16	HLB1574-437

TABLE 3

SUPER-KEY

HEX SIZE (Matches Pin Recess Hex)	PART NO.
1/16	HLT140K-062
5/64	HLT140K-078
3/32	HLT140K-094
1/8	HLT140K-125

Hi-Shear Corporation
2600 Skypark Dr. Torrance, CA 90509 USA
tel 310.326.8110 • Tool Div. fax 310.784.4270

HLG168
4 INCH OFFSET ADAPTOR ASSEMBLY with Flush Socket and Super-Key™ (T-Series)

SUPER HLA1201

1 inch Offset Mini Driver Assembly with Thin Flush Socket and Super-Key™ (T-Series)

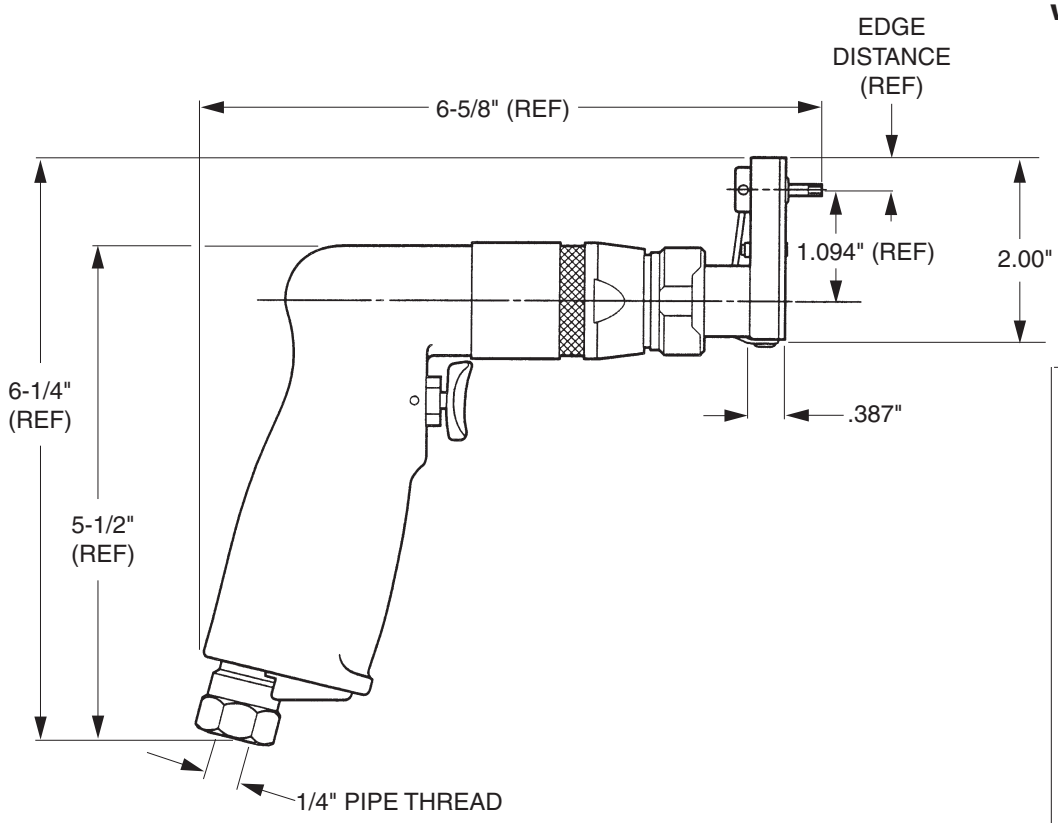

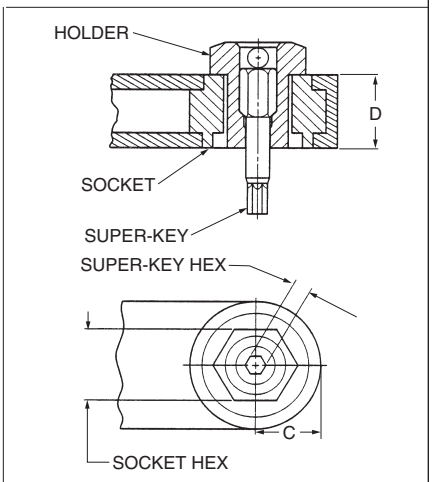

SOCKET END DETAIL

Socket Size	A C to C	B Overall	C Edge Dist.	D Width
ALL	1.094	2.000	0.360	0.387

TECHNICAL DATA

Operating Pressure ..... 90 PSIA

MAX. TORQUE RATING ..... 60 in. lb (Motor) @90 PSIA

Socket Speed ..... 500 RPM

Horsepower Rating 0.2

Air Consumption ..... 20 CFM

Weight ..... 2 lb

DRIVER BASIC PART NO. — SOCKET HEX REF. TABLE 1 — SUPER-KEY HEX REF. TABLE 1 — SUPER-KEY (T-SERIES)

HLA1201-312 -078 -T

Example: complete driver assy. part no.

ORDERING INFORMATION

1. Match pin and collar hexes with Super-Key Hex and Socket Hex.
2. See table 1 for corresponding complete driver assy part no.

TABLE 1

COLLAR DRIVING HEX (Matches Socket Hex)	PIN RECESS HEX (Matches Super-Key Hex)	COMPLETE DRIVER ASSY. PART NO.	OFFSET ADAPTOR AND SOCKET ASSY. PART NO.
3/16	1/16	HLA1201-187-062T	HLG326-187-062T
7/32		HLA1201-218-062T	HLG326-218-062T
1/4		HLA1201-250-062T	HLG326-250-062T
9/32		HLA1201-281-062T	HLG326-281-062T
5/16		HLA1201-312-062T	HLG326-312-062T
11/32		HLA1201-343-062T	HLG326-343-062T
7/32	5/64	HLA1201-218-078T	HLG326-218-078T
1/4		HLA1201-250-078T	HLG326-250-078T
9/32		HLA1201-281-078T	HLG326-281-078T
5/16		HLA1201-312-078T	HLG326-312-078T
11/32		HLA1201-343-078T	HLG326-343-078T

HLG326

1 Inch Offset Mini Adaptor Assembly with Multi-Length Socket and Super-Key™ (T-Series)

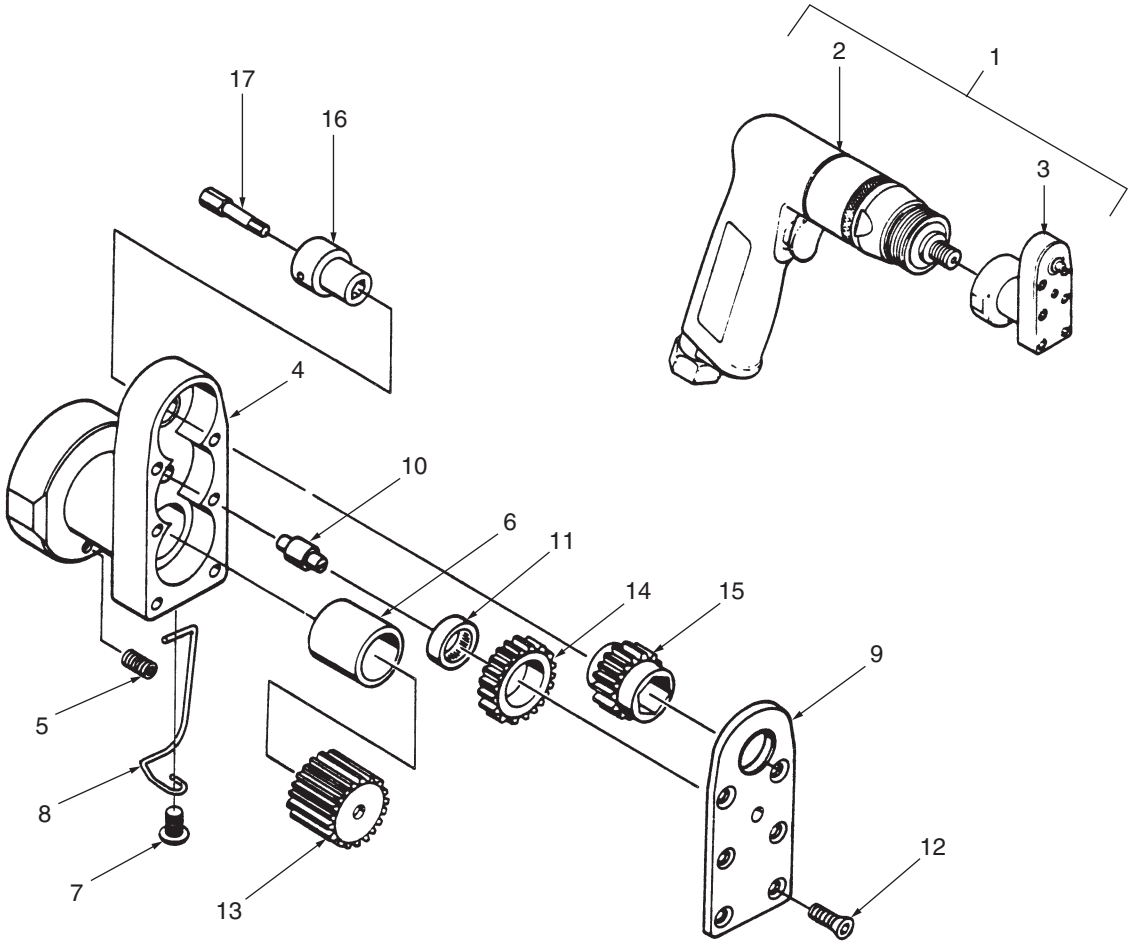

TABLE 2

SOCKET GEAR

HEX SIZE (Matches Collar Driving Hex)	PART NO.
3/16	HLB1543-187
7/32	HLB1543-218
1/4	HLB1543-250
9/32	HLB1543-281
5/16	HLB1543-312
11/32	HLB1543-343

TABLE 3

SUPER-KEY

HEX SIZE (Matches Pin Recess Hex)	PART NO.
1/16	HLT140K-062
5/64	HLT140K-078

ITEM	PART NO.	DESCRIPTION	QTY	ITEM	PART NO.	DESCRIPTION	QTY
1	HLA1201-( )-( )T	Complete tool assy.	1	10	HLB1628	. . Intermediate	1
2	HLB1575	. Air motor assy.	1	11	B34	. . Bearing (Torrington)	1
3	HLG326-( )-( )T	. . Offset adaptor & socket assy.	1	12	HLB379	. . Screw, flat head socket	6
4	HLB1563	. . Housing	1	13	HLB1541	. . Gear, drive	1
5	5-40 UNC x .125 lg.	. . Set screw	1	14	HLB1544	. . Gear, idler	1
6	HLB1542	. . Spacer	1	15	HLB1543-( )	. . Gear, socket **Table 2**	1
7	6-32 x .187 lg.	. . Screw, button head	1	16	HLB138-( )	. . Holder	1
8	HLB1627	. . Spring, ejector	1	17	HLT140K-( )	. . Super-Key **Table 3**	1
9	HLB1540	. . Cover	1				

Hi-Shear Corporation
2600 Skypark Dr. Torrance, CA 90509 USA
tel 310.326.8110 • Tool Div. fax 310.784.4270

HLG326
1 INCH OFFSET MINI ADAPTOR ASSEMBLY w/Multi-Length Socket & Super-Key™ (T-Series)

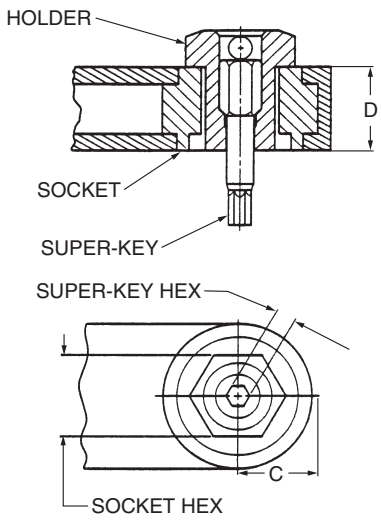

SOCKET END DETAIL

INSTALLATION TOOLING

SUPER HLA1202

2 Inch Offset Mini Driver Assembly with Thin Flush Socket and Super-Key™ (T-Series)

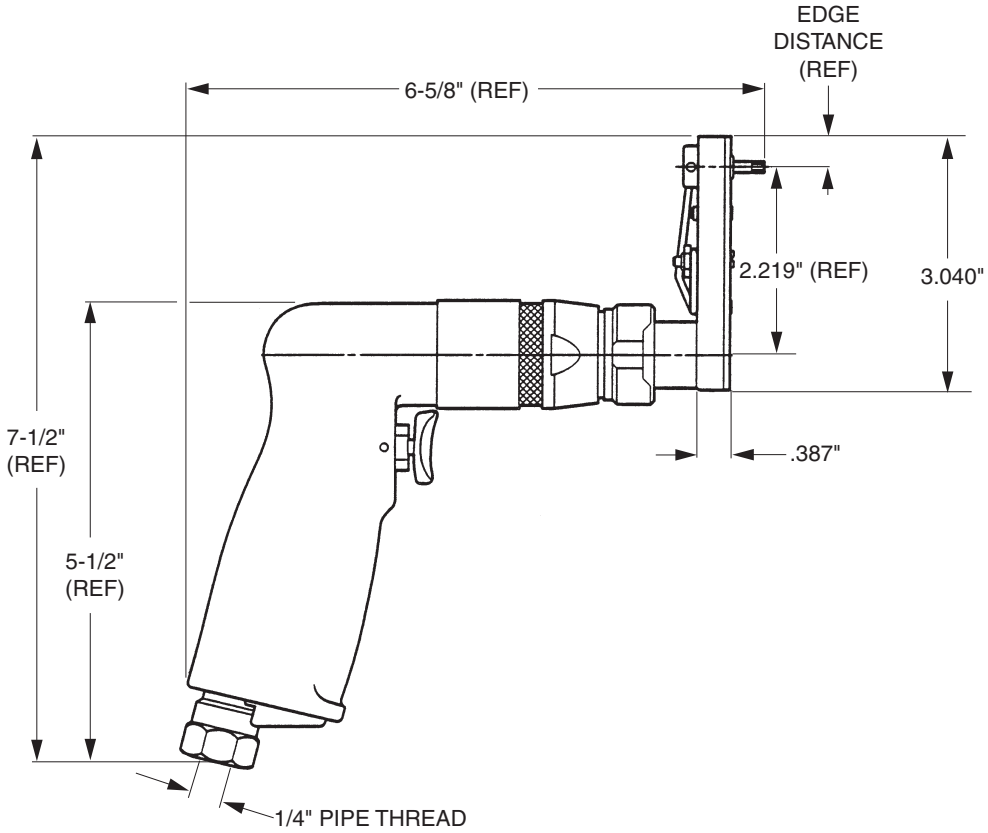

Socket Size	A C to C	B Overall	C Edge Dist.	D Width
ALL	2.219	3.040	0.360	0.387

TECHNICAL DATA

Operating Pressure ..... 90 PSIA

MAX. TORQUE RATING ..... 60 in. lb (Motor) @90 PSIA

Socket Speed ..... 500 RPM

Horsepower Rating 0.2

Air Consumption ..... 20 CFM

Weight ..... 2 lb

DRIVER BASIC PART NO. — SOCKET HEX REF. TABLE 1 — SUPER-KEY HEX REF. TABLE 1 — SUPER-KEY HEX (T-SERIES)

HLA1202-312-078-T

Example: complete driver assy. part no.

ORDERING INFORMATION

1. Match pin and collar hexes with Super-Key Hex and Socket Hex.
2. See table 1 for corresponding complete driver assy part no.

TABLE 1

COLLAR DRIVING HEX (Matches Socket Hex)	PIN RECESS HEX (Matches Super-Key Hex)	COMPLETE DRIVER ASSY. PART NO.	OFFSET ADAPTOR AND SOCKET ASSY. PART NO.
3/16	1/16	HLA1202-187-062T	HLG327-187-062T
7/32		HLA1202-218-062T	HLG327-218-062T
1/4		HLA1202-250-062T	HLG327-250-062T
9/32		HLA1202-281-062T	HLG327-281-062T
5/16		HLA1202-312-062T	HLG327-312-062T
11/32		HLA1202-343-062T	HLG327-343-062T
7/32	5/64	HLA1202-218-078T	HLG327-218-078T
1/4		HLA1202-250-078T	HLG327-250-078T
9/32		HLA1202-281-078T	HLG327-281-078T
5/16		HLA1202-312-078T	HLG327-312-078T
11/32		HLA1202-343-078T	HLG327-343-078T

HLG327

2 Inch Offset Mini Adaptor Assembly with Thin FLush Socket and Super-Key™ (T-Series)

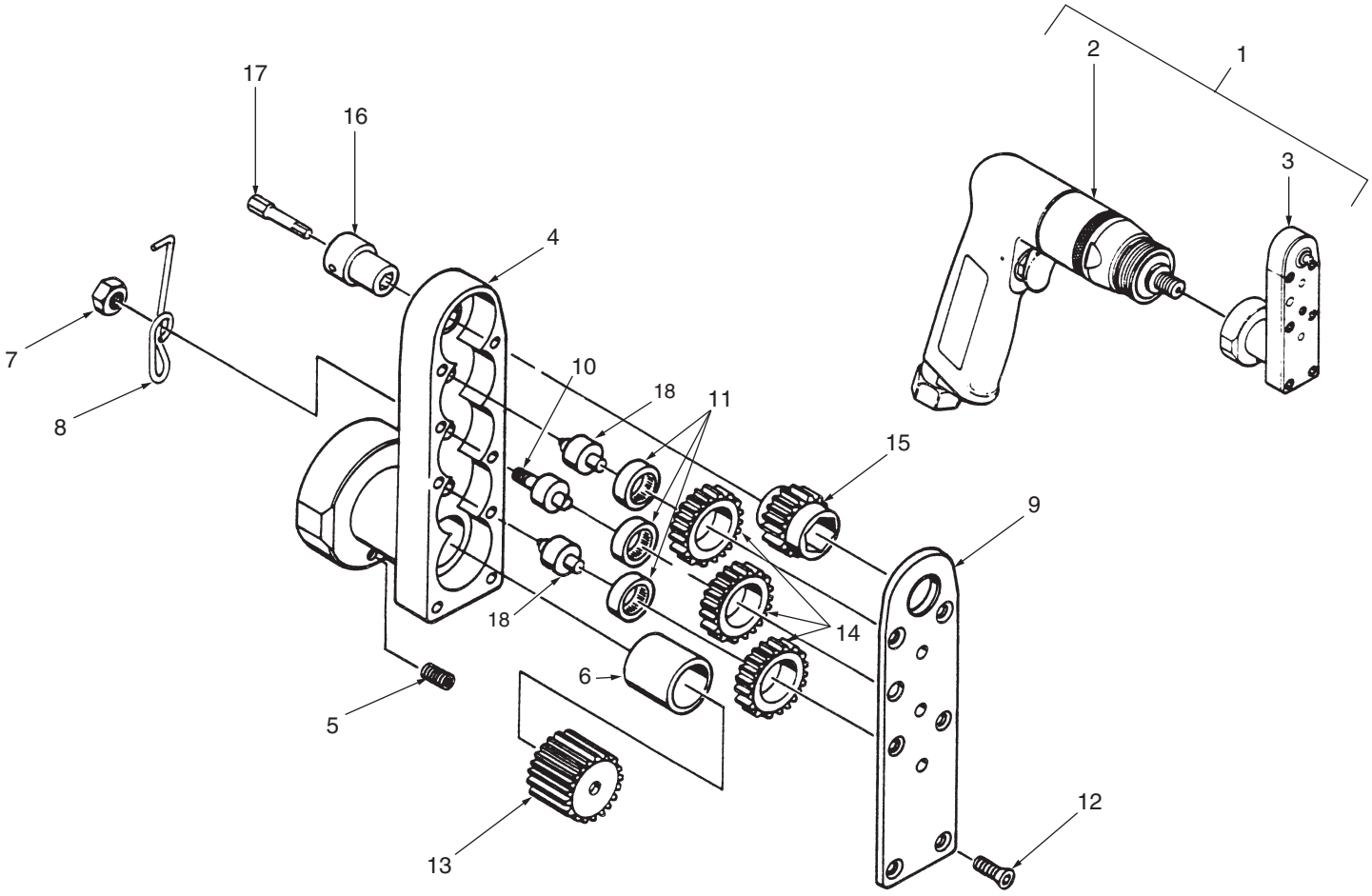

TABLE 2

SOCKET GEAR

HEX SIZE (Matches Collar Driving Hex)	PART NO.
3/16	HLB1543-187
7/32	HLB1543-218
1/4	HLB1543-250
9/32	HLB1543-281
5/16	HLB1543-312
11/32	HLB1543-343

TABLE 3

SUPER-KEY

HEX SIZE (Matches Pin Recess Hex)	PART NO.
1/16	HLT140K-062
5/64	HLT140K-078

ITEM	PART NO.	DESCRIPTION	QTY	ITEM	PART NO.	DESCRIPTION	QTY
1	HLA1202-( )-( )T	Complete tool assy.	1	10	HLB208-3	. . Shaft	1
2	HLB1575	. Air motor assy.	1	11	B34	. . Bearing (Torrington)	1
3	HLG327-( )-( )T	. . Offset adaptor & socket assy.	1	12	HLB379	. . Screw, flat head socket	6
4	HLB1563	. . Housing	1	13	HLB1541	. . Gear, drive	1
5	5-40 UNC x .125 lg.	. . Set screw	1	14	HLB1544	. . Gear, idler	3
6	HLB1542	. . Spacer	1	15	HLB1543-( )	. . Gear, socket **Table 2**	1
7	AN364-632C	. . Nut, hex	1	16	HLB138-( )	. . Holder	1
8	HLB1545	. . Spring, ejector	1	17	HLT140K-( )	. . Super-Key **Table 3**	1
9	HLB1556	. . Cover	1	18	HLB1628	. . Shaft, intermediate	2

Hi-Shear Corporation
2600 Skypark Dr. Torrance, CA 90509 USA
tel 310.326.8110 •Tool Div. fax 310.784.4270

HLG327
2 INCH OFFSET MINI ADATPRO ASSEMBLY w/Thin Flush Socket & Super-Key™(T-Series)

SUPER HLA1203

1 Inch Offset Mini Driver Assembly with Multi-Length Socket and Super-Key™ (T-Series)

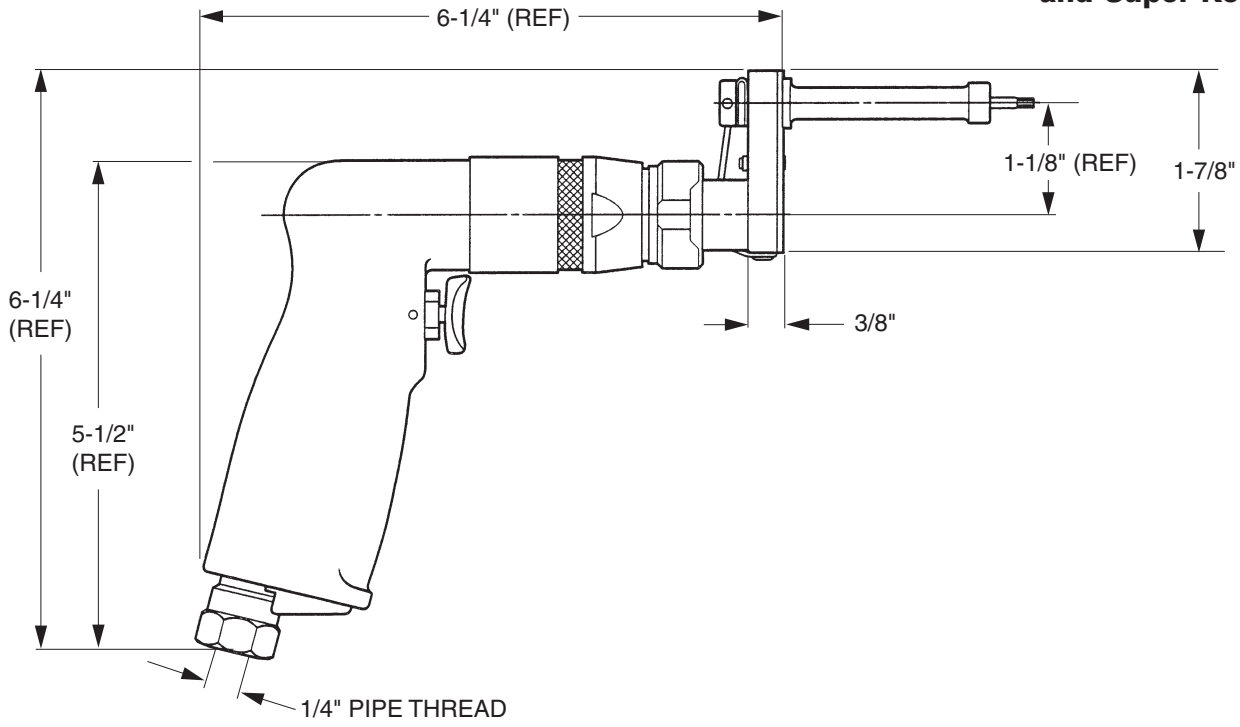

SOCKET ASSEMBLY DETAIL

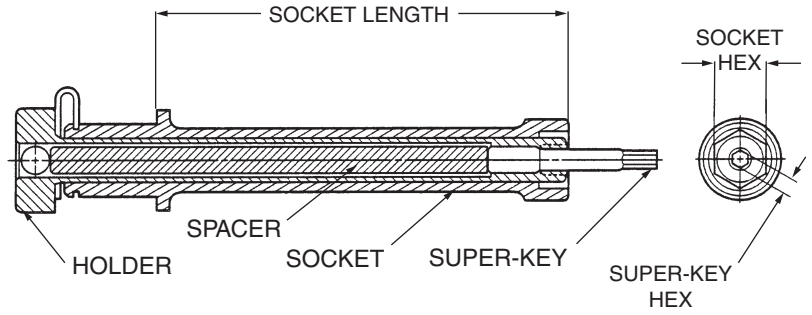

DRIVER BASIC PART NO. | SOCKET HEX REF. TABLE 1 | SOCKET LENGTH REF. TABLE 2 | SUPER-KEY HEX REF. TABLE 1 | SUPER-KEY HEX REF. TABLE 1

HLA1203-312 (B) - 078-T

Example: complete driver assy. part no.

ORDERING INFORMATION

1. Match pin and collar hexes with Super-Key Hex and Socket Hex.
2. See table 1 for corresponding complete driver assy part no.

TECHNICAL DATA

Operating Pressure ..... 90 PSIA	Horsepower Rating 0.2
MAX. TORQUE RATING ..... 60 in. lb (Motor) @90 PSIA	Air Consumption ..... 20 CFM
Socket Speed ..... 500 RPM	Weight ..... 2 lb

TABLE 1

COLLAR DRIVING HEX (Matches Socket Hex)	PIN RECESS HEX (Matches Super-Key Hex)	COMPLETE DRIVER ASSY. PART NO.	OFFSET ADAPTOR AND SOCKET ASSY. PART NO.
1/4	5/64	HLA1203-250( )-078T	HLS32-250( )-078
5/16	5/64	HLA1203-312( )-078T	HLS32-312( )-078

TABLE 2

A = 0.50	E = 0.75
B = 1.00	F = 1.75
C = 1.50	X = 4.00
D = 2.00	

HLG326

1 Inch Offset Mini Adaptor Assembly
with Multi-Length Socket and Super-Key™ (T-Series)

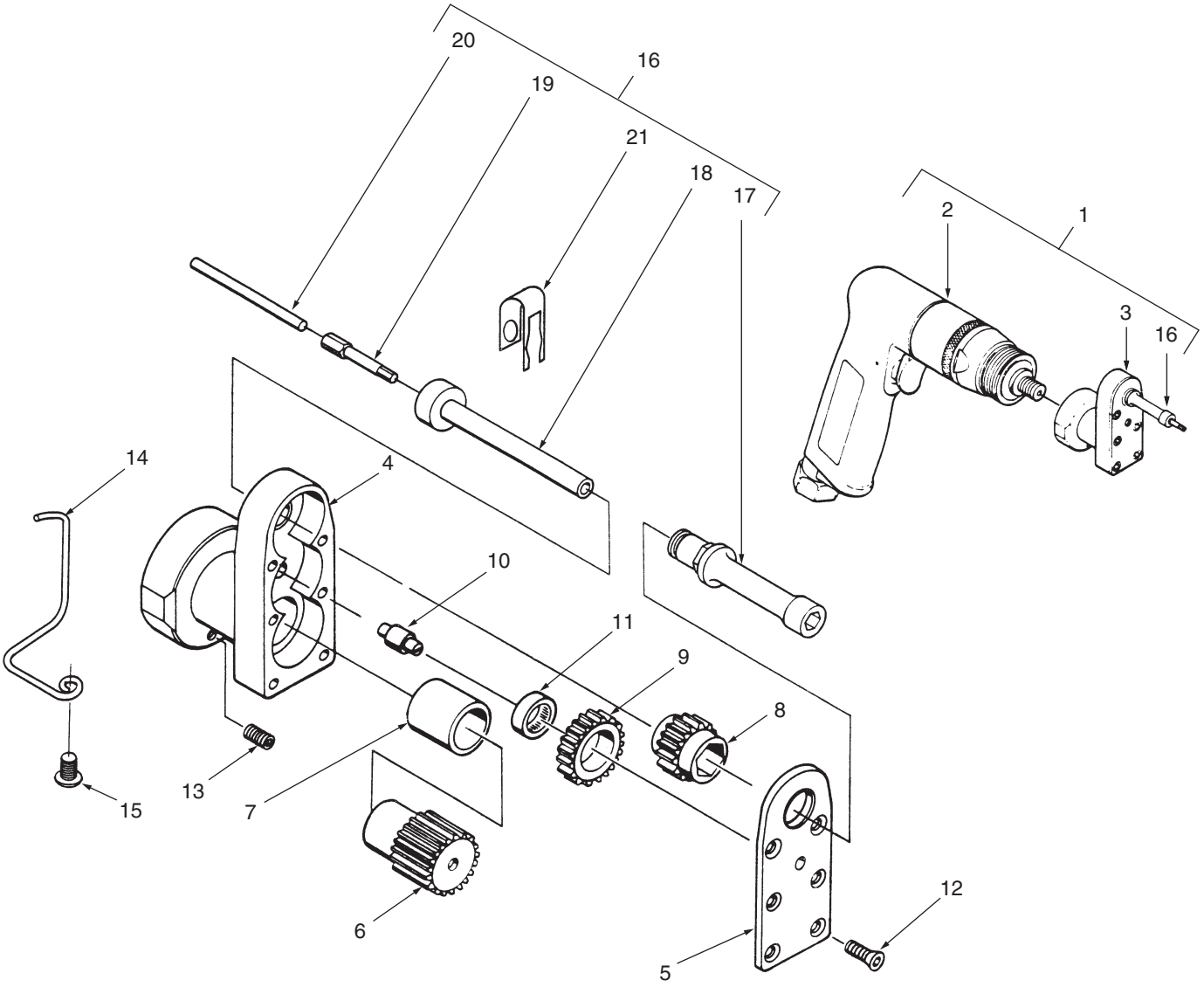

ITEM	PART NO.	DESCRIPTION	QTY	ITEM	PART NO.	DESCRIPTION	QTY
1	HLA1203-( )-( )T	Complete tool assy.	1	12	HLB379	. . Screw, flat head socket	5
2	HLB1575	. Air motor assy.	1	13	5-40 UNC x .187 lg.	. . Set screw	1
3	HLG326-343	. . Attachment assy.	1	14	HLB1627	. . Spring, ejector	1
4	HLB1563	. . Housing	1	15	6-32 UNC x .187 lg.	. . Screw, button head cap	1
5	HLB1540	. . Cover	1	16	HLS32-( )( )-078	. Socket assy.	1
6	HLB1541	. . Gear, drive	1	17	HLS71-( )( )	. . Socket, hex	1
7	HLB1542	. . Spacer	1	18	HLB1615-250( )	. . Holder	1
8	HLB1543-343	. . Gear, socket	1	19	HLT140K-(078)	. . Super-Key	1
9	HLB1544	. . Gear, idler	1	20	HLB1616-( )	. . Spacer	1
10	HLB1628	. . Shaft, intermediate	1	21	HLB1635	. . Ring, lock	1
11	B34	. . Bearing (Torrington)	1				

Hi-Shear Corporation
2600 Skypark Dr. Torrance, CA 90509 USA
tel 310.326.8110 • Tool Div. fax 310.784.4270

HLG326
1 INCH OFFSET MINI ADAPTOR ASSEMBLY with Multi-Length Socket and Super-Key™ (T-Series)

HLA1204

2 Inch Offset Mini Driver Assembly with Multi-Length Socket and Super-Key™ (T-Series)

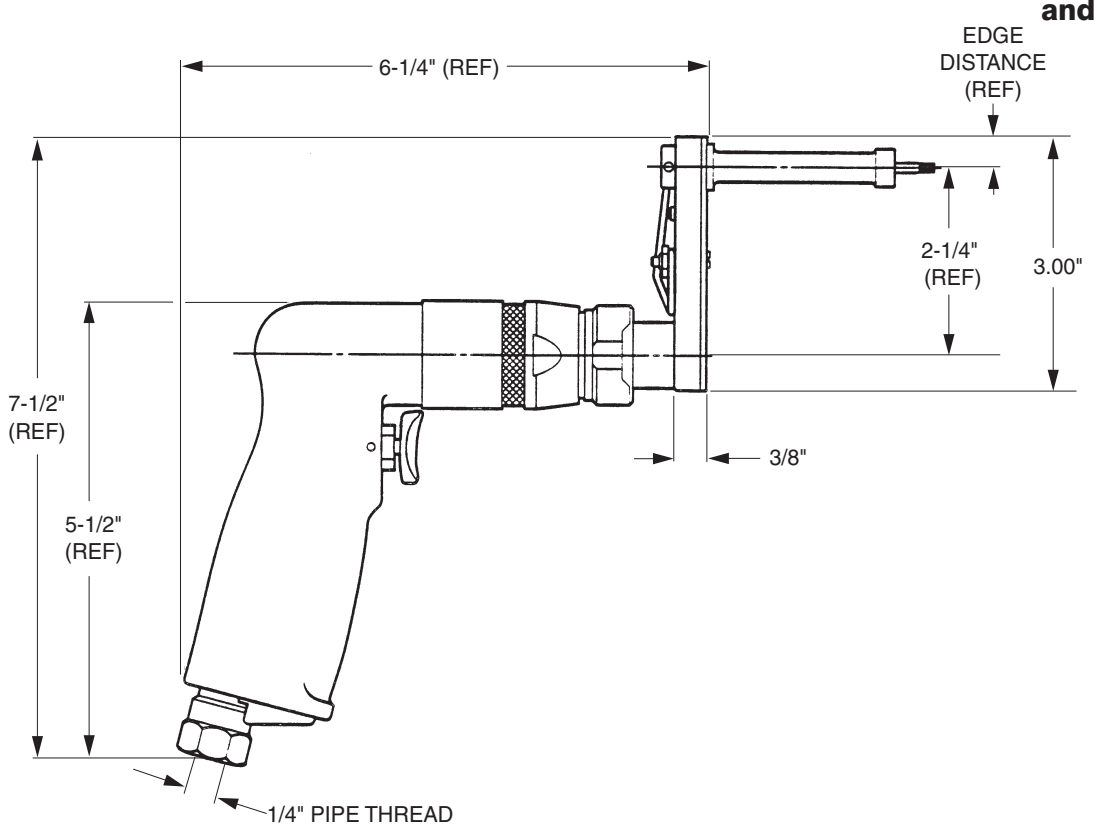

DRIVER BASIC PART NO. | SOCKET HEX REF. TABLE 1 | SOCKET LENGTH REF. TABLE 2 | SUPER-KEY HEX REF. TABLE 1 | SUPER-KEY HEX (T-SERIES)

HLA1204-312 (B)-078 -T

Example: complete driver assy. part no.

ORDERING INFORMATION

1. Match pin and collar hexes with Super-Key Hex and Socket Hex.
2. See table 1 for corresponding complete driver assy part no.

SOCKET ASSEMBLY DETAIL

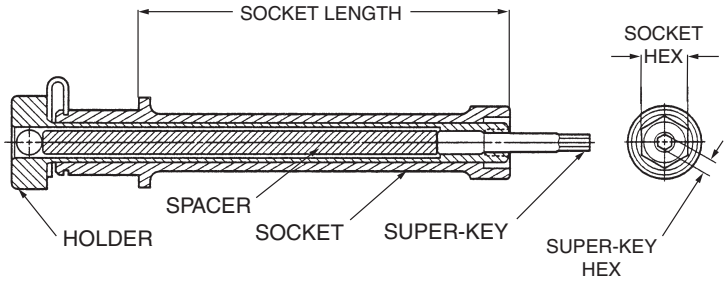

TECHNICAL DATA

Operating Pressure ..... 90 PSIA	Horsepower Rating 0.2
MAX. TORQUE RATING ..... 60 in. lb (Motor) @90 PSIA	Air Consumption ..... 20 CFM
Socket Speed ..... 500 RPM	Weight ..... 2 lb

TABLE 1

COLLAR DRIVING HEX (Matches Socket Hex)	PIN RECESS HEX (Matches Super-Key Hex)	COMPLETE DRIVER ASSY. PART NO.	OFFSET ADAPTOR AND SOCKET ASSY. PART NO.
1/4	5/64	HLA1204-250( )-078T	HLS32-250( )-078
5/16	5/64	HLA1204-312( )-078T	HLS32-312( )-078

TABLE 2

A = 0.50	E = 0.75
B = 1.00	F = 1.75
C = 1.50	X = 4.00
D = 2.00	

HLG328

2 Inch Offset Mini Driver Assembly with Multi-Length Socket and Super-Key™ (T-Series)

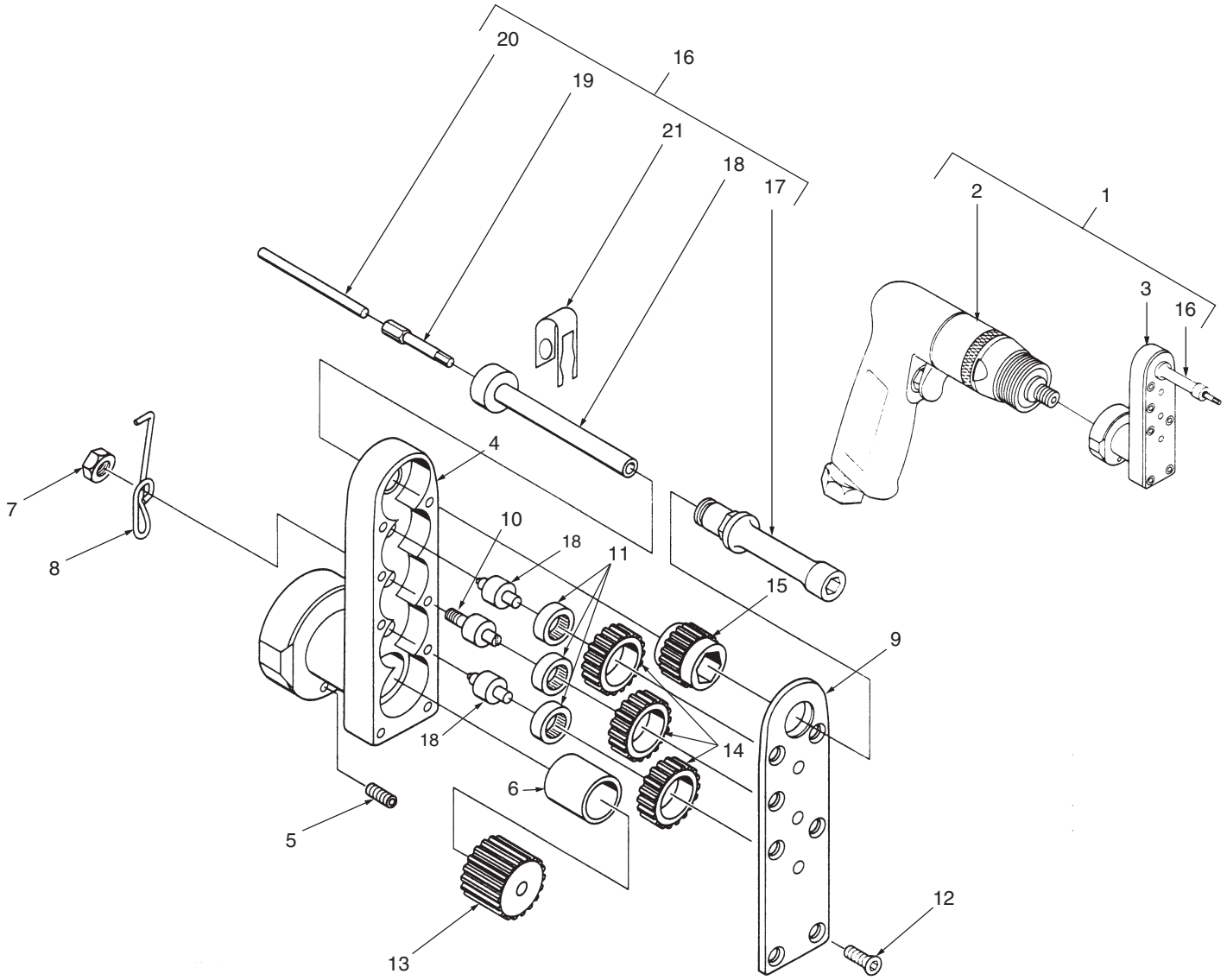

ITEM	PART NO.	DESCRIPTION	QTY	ITEM	PART NO.	DESCRIPTION	QTY
1	HLA1204-( )-( )T	Complete tool assy.	1	12	HLB379	. . Screw, flat head socket	6
2	HLB1575	. Air motor assy.	1	13	HLB1541	. . Gear, drive	1
3	HLG328-( )( )T	. Offset adaptor & socket assy.	1	14	HLB1544	. . Gear, idler	3
4	HLB1564	. . Housing	1	15	HLB1543-( )	. . Gear, socket **Table 3**	1
5	5-40 UNC x .125 lg.	. . Set screw	1	16	HLS32-( )( )-078	. Socket assy.	1
6	HLB1542	. . Spacer	1	17	HLS71-( )( )	. . Socket, hex	1
7	AN364-632C	. . Nut, hex	1	18	HLB1615-250( )	. . Holder	1
8	HLB1545	. . Spring, ejector	1	19	HLT140K-(078)	. . Super-Key	1
9	HLB1566	. . Cover	1	20	HLB1616-( )	. . Spacer	1
10	HLB208-3	. . Shaft	1	21	HLB1635	. . Ring, lock	1
11	B34	. . Bearing (Torrington)	3				

Hi-Shear Corporation
2600 Skypark Dr. Torrance, CA 90509 USA
tel 310.326.8110 • Tool Div. fax 310.784.4270

HLG328
2 Inch Offset Mini Driver Assembly with Multi-Length Socket and Super-Key™ (T-Series)

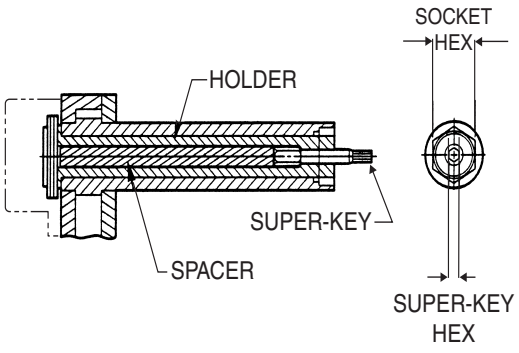

HLG208 - ( )( )- ( ) T SOCKET ASSY

INSTALLATION TOOLING

SUPER HLA2068

Heavy Duty 2 Inch Offset Driver Assembly with 2 Inch Extended Socket and Super-Key™ (T-Series)

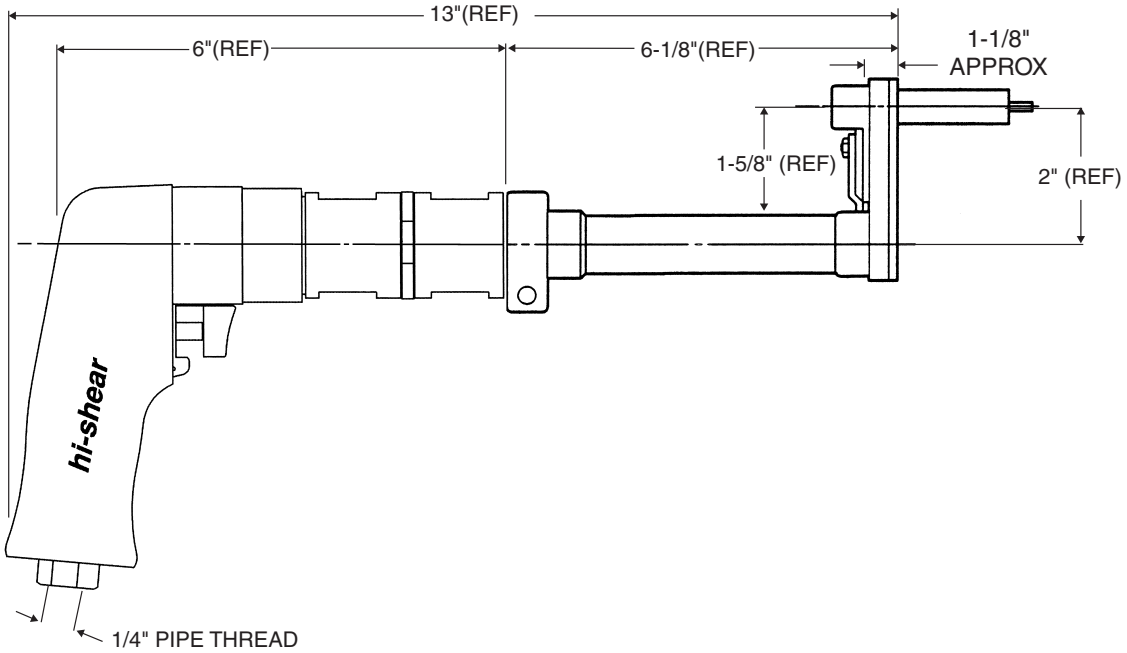

DRIVER BASIC PART NO. | SOCKET HEX REF. TABLE 1 | SUPER-KEY HEX REF. TABLE 1 | SUPER-KEY (T-SERIES)

HLA2068-312-078-T

Example: complete driver assy. part no.

ORDERING INFORMATION

1. Match pin and collar hexes with Super-Key Hex and Socket Hex.
2. See table 1 for corresponding complete driver assy part no.

TECHNICAL DATA

Operating Pressure ..... 90 PSIA	Horsepower Rating 0.70
MAX. TORQUE RATING ..... 300 in. lb (Motor) @90 PSIA	Air Consumption ..... 22 SCFM
Socket Speed ..... 250 RPM	Weight ..... 3.8 lb

TABLE 1

COLLAR DRIVING HEX (Matches Socket Hex)	PIN RECESS HEX (Matches Super-Key Hex)	COMPLETE DRIVER ASSY.	OFFSET ADAPTOR & SOCKET ASSY.
5/16	1/16	HLA2068-312-062T	HLG208-312-062T
11/32		HLA2068-343-062T	HLG208-343-062T
5/16	5/64	HLA2068-312-078T	HLG208-312-078T
11/32		HLA2068-343-078T	HLG208-343-078T
3/8		HLA2068-375-078T	HLG208-375-078T
5/16	3/32	HLA2068-312-094T	HLG208-312-094T
11/32		HLA2068-343-094T	HLG208-343-094T
3/8		HLA2068-375-094T	HLG208-375-094T
7/16		HLA2068-437-094T	HLG208-437-094T
3/8	1/8	HLA2068-375-125T	HLG208-375-125T
7/16		HLA2068-437-125T	HLG208-437-125T

HLG208

Heavy Duty 2 Inch Offset Adaptor Assembly with 2 Inch Extended Socket and Super-Key™ (T-Series)

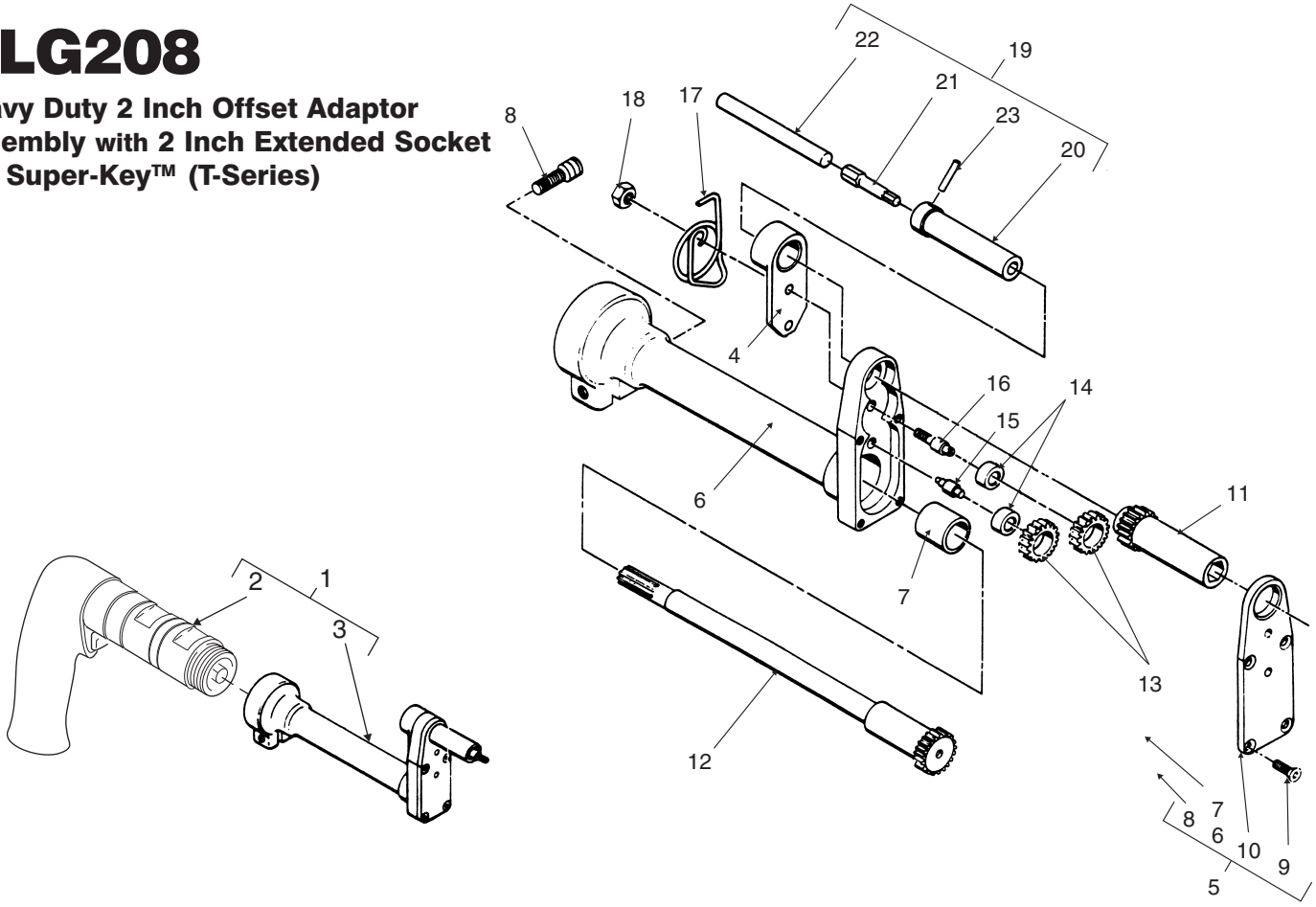

ITEM	PART NO.	DESCRIPTION	QTY
1	HLA2068-( )-( )T	Tool assy., complete	1
2	HLB1174-005	. Air motor assy.	1
3	HLG208-( )-( )T	. Offset adaptor and socket assy.	1
4	HLB1068-( )	. . Housing	1
5	HLB169-9	. . Housing assy., complete	1
	(-13 for .437 socket)		
6	HLB168-9	. . . Housing assy.	1
	(-13 for .437 socket)		
7	B810-5	. . . . Bushing (Boston Gear)	1
8	1/4-28 x 5/8 lg.	. . . Capscrew, socket head	1
9	6-32 x 3/8 lg.	. . . Screw, countersunk-82°	4
10	HLB173	. . . Plate, cover	1
	(HLB174 for 7/16)		
11	HLB261-( ) **Table 2**	. . Gear, socket	1
12	HLB103-5	. . Gear, drive	1
13	HLB106-11	. . Gear, intermediate, no. 1 and no. 2	2
14	B-34	. . . Bearing (Torrington)	2
15	HLB1070	. . Shaft, no. 1	1
16	HLB1069	. . Shaft, no. 2	1
17	HLB1071-5	. . Spring	1
18	AN364-632C	. . Nut, lock	2
19	HLW359-( )-( )	. . Holder assy., wrench tip	1
20	HLB1704-( )-( )	. . . Holder	1
21	HLT140K-( ) **Table 3**	. . . Super-Key	1
22	HLB1616-( )	. . . Spacer	1
23	3/32 dia. x .625 lg.	. . . Pin, roll	1

TABLE 2

SOCKET GEAR

HEX SIZE (Matches Collar Driving Hex)	PART NO.
5/16	HLB261-312
11/32	HLB261-343
3/8	HLB261-375
7/16	HLB261-437

TABLE 3

SUPER-KEY

HEX SIZE (Matches Pin Recess Hex)	PART NO.
1/16	HLT140K-062
5/64	HLT140K-078
3/32	HLT140K-094
1/8	HLT140K-125

Hi-Shear Corporation
2600 Skypark Dr. Torrance, CA 90509 USA
tel 310.326.8110 • Tool Div. fax 310.784.4270

HLG208
HEAVY DUTY 2 INCH OFFSET ADAPTOR ASSEMBLY with 2 Inch Extended Socket and Super-Key™ (T-Series)

SUPER HLA3023

6 Inch Offset Back Drive Driver Assembly with Extended Socket and Super-Key™ (T-Series)

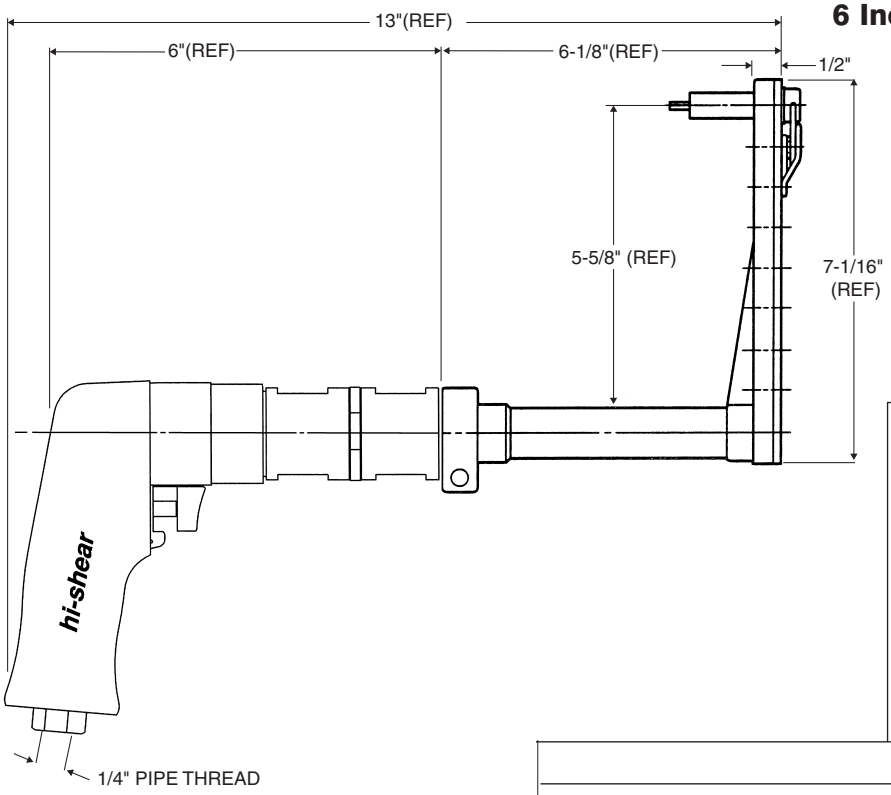

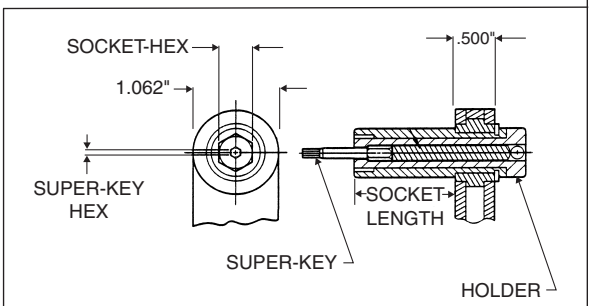

HLS76- ( )( )- ( )T SOCKET ASSY

TECHNICAL DATA

Operating Pressure	90 PSIA	Horsepower Rating	0.70
MAX. TORQUE RATING (Motor)	300 in. lb @90 PSIA	Air Consumption	22 SCFM
Socket Speed	250 RPM	Weight	3.8 lb

DRIVER BASIC PART NO. — SOCKET HEX (REF TABLE 1) — SOCKET LENGTH CODE (REF TABLE 2) — SUPER-KEY HEX (REF TABLE 1) — SUPER-KEY (T-SERIES)

HLA3023-312(A)-078-T

Example: complete driver assy part no.

ORDERING INFORMATION

1. Match pin and collar hexes with Super-Key Hex and Socket Hex.
2. See table 1 for corresponding complete driver assy part no.

TABLE 2

A = 0.50	E = 0.75
B = 1.00	F = 1.75
C = 1.50	X = 4.00
D = 2.00	

TABLE 1

COLLAR DRIVING HEX (Matches Socket Hex)	PIN RECESS HEX (Matches Super-Key Hex)	COMPLETE DRIVER ASSY. PART NO.	OFFSET ADAPTOR & SOCKET ASSY. PART NO.	EXTENDED SOCKET ASSY. PART NO.
3/16	1/16	HLA3023-187( )-062T	HLG329-187( )-062T	HLS76-187( )-062T
7/32		HLA3023-218( )-062T	HLG329-218( )-062T	HLS76-218( )-062T
1/4		HLA3023-250( )-062T	HLG329-250( )-062T	HLS76-250( )-062T
9/32		HLA3023-281( )-062T	HLG329-281( )-062T	HLS76-281( )-062T
5/16		HLA3023-312( )-062T	HLG329-312( )-062T	HLS76-312( )-062T
11/32		HLA3023-343( )-062T	HLG329-343( )-062T	HLS76-343( )-062T
7/32	5/64	HLA3023-218( )-078T	HLG329-218( )-078T	HLS76-218( )-062T
1/4		HLA3023-250( )-078T	HLG329-250( )-078T	HLS76-250( )-062T
9/32		HLA3023-281( )-078T	HLG329-281( )-078T	HLS76-281( )-062T
5/16		HLA3023-312( )-078T	HLG329-312( )-078T	HLS76-312( )-062T
11/32		HLA3023-343( )-078T	HLG329-343( )-078T	HLS76-343( )-062T
3/8		HLA3023-375( )-078T	HLG329-375( )-078T	HLS76-375( )-062T
5/16	3/32	HLA3023-312( )-094T	HLG329-312( )-094T	HLS76-312( )-062T
11/32		HLA3023-343( )-094T	HLG329-343( )-094T	HLS76-343( )-062T
3/8		HLA3023-375( )-094T	HLG329-375( )-094T	HLS76-375( )-062T
7/16		HLA3023-437( )-094T	HLG329-437( )-094T	HLS76-437( )-062T
3/8	1/8	HLA3023-375( )-125T	HLG329-375( )-125T	HLS76-375( )-062T
7/16		HLA3023-437( )-125T	HLG329-437( )-125T	HLS76-437( )-062T

HLG329

6 Inch Offset Back Drive Adaptor Assembly with Extended Socket and Super-Key™ (T-Series)

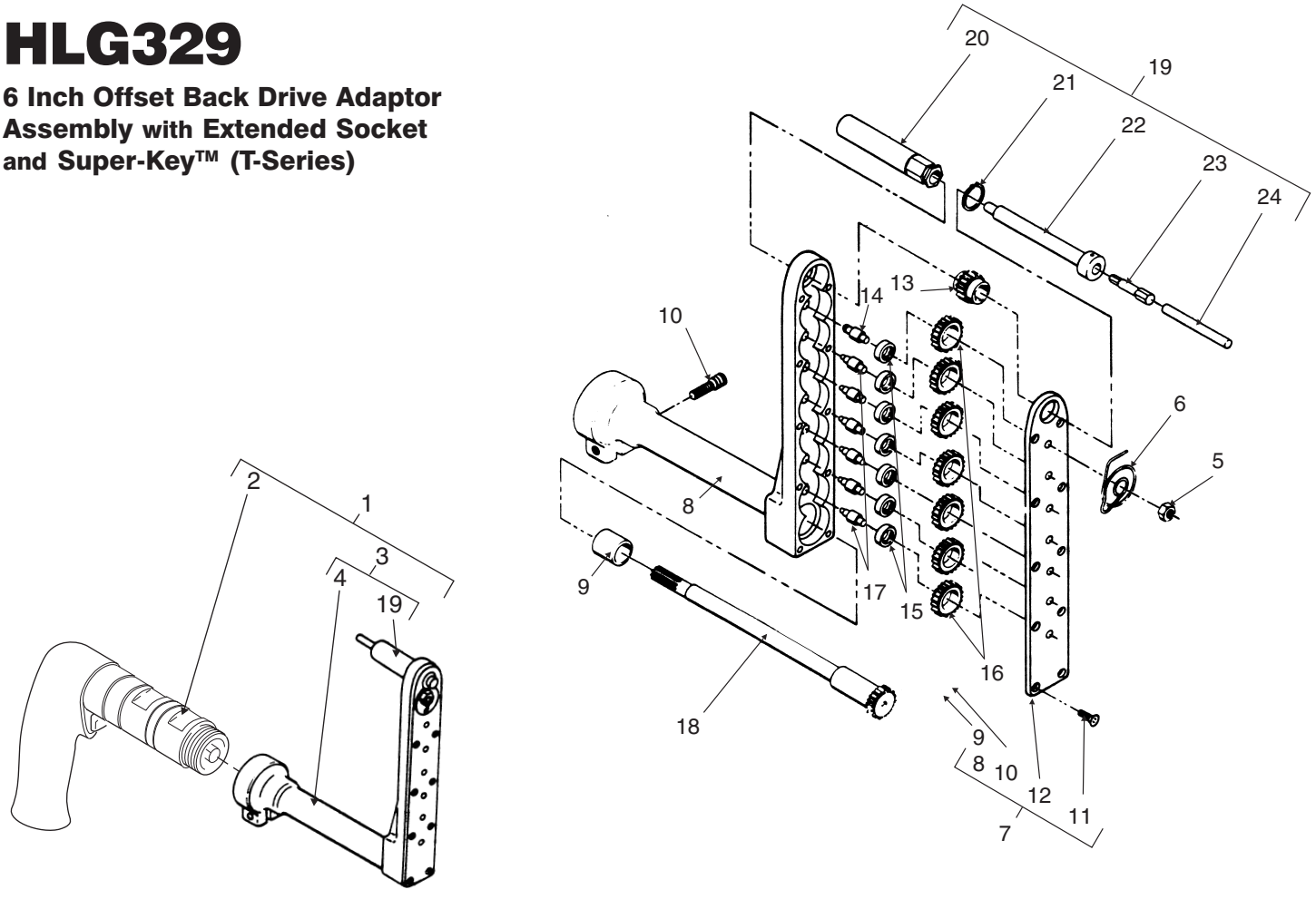

ITEM	PART NO.	DESCRIPTION	QTY
1	HLA3023-( )( )-( )T	Tool assy., complete	1
2	HLB1174-005	. Air motor assy.	1
3	HLG329-( )( )-( )T	. Offset adaptor and socket assy.	1
4	HLG330	. . Offset adaptor assy.	1
5	AN364-632C	. . . Nut, hex	1
6	HLB1475-5	. . . Spring, ejector	1
7	HLB1571	. . . Housing assy., complete	1
8	HLB1572	. . . . Housing sub-assy.	1
9	B810	. . . . . Bushing	1
10	1/4-28 x 5/8 lg.	. . . . Capscrew, socket head	1
11	6-32 x 3/8 lg.	. . . . Screw, countersunk-82°	10
12	HLB1573	. . . . Plate, cover	1
13	HLB23-437	. . . Gear, socket - 7/16 thru hex	1
14	HLB105	. . . Shaft, intermediate, no. 2	1
15	B34	. . . Bearing (Torrington)	7
16	HLB106-11	. . . Gear, intermediate	7
17	HLB159	. . . Shaft, intermediate, no. 1	6
18	HLB103-5	. . . Gear, drive	1
19	HLS76-( )( )-( )T	. . Socket assy., extended	1
20	HLS47-( )( ) **Table 3**	. . . Socket	1
21	5100-50	. . . Ring, retaining	1
22	HLB1665-( )( )	. . . Holder	1
23	HLT140K-( ) **Table 4**	. . . Super-Key	1
24	HLB1616-( )	. . . Spacer	1

TABLE 3

SOCKET

HEX SIZE (Matches Collar Driving Hex)	PART NO.
3/16	HLS47-187( )
7/32	HLS47-218( )
1/4	HLS47-250( )
9/32	HLS47-281( )
5/16	HLS47-312( )
11/32	HLS47-343( )
3/8	HLS47-375( )
7/16	HLS47-437( )

TABLE 4

SUPER-KEY

HEX SIZE (Matches Pin Recess Hex)	PART
1/16	HLT140K-062
5/64	HLT140K-078
3/32	HLT140K-094
1/8	HLT140K-125

Hi-Shear Corporation
2600 Skypark Dr. Torrance, CA 90509 USA
tel 310.326.8110 • Tool Div. fax 310.784.4270

HLG329
6 INCH OFFSET BACK DRIVE ADAPTOR ASSY w/ Extd. Socket and Super-Key™ (T-Series)

SUPER HLA3025

6 Inch Offset Driver Assembly with Multi-Length Socket and Super-Key™ (T-Series)

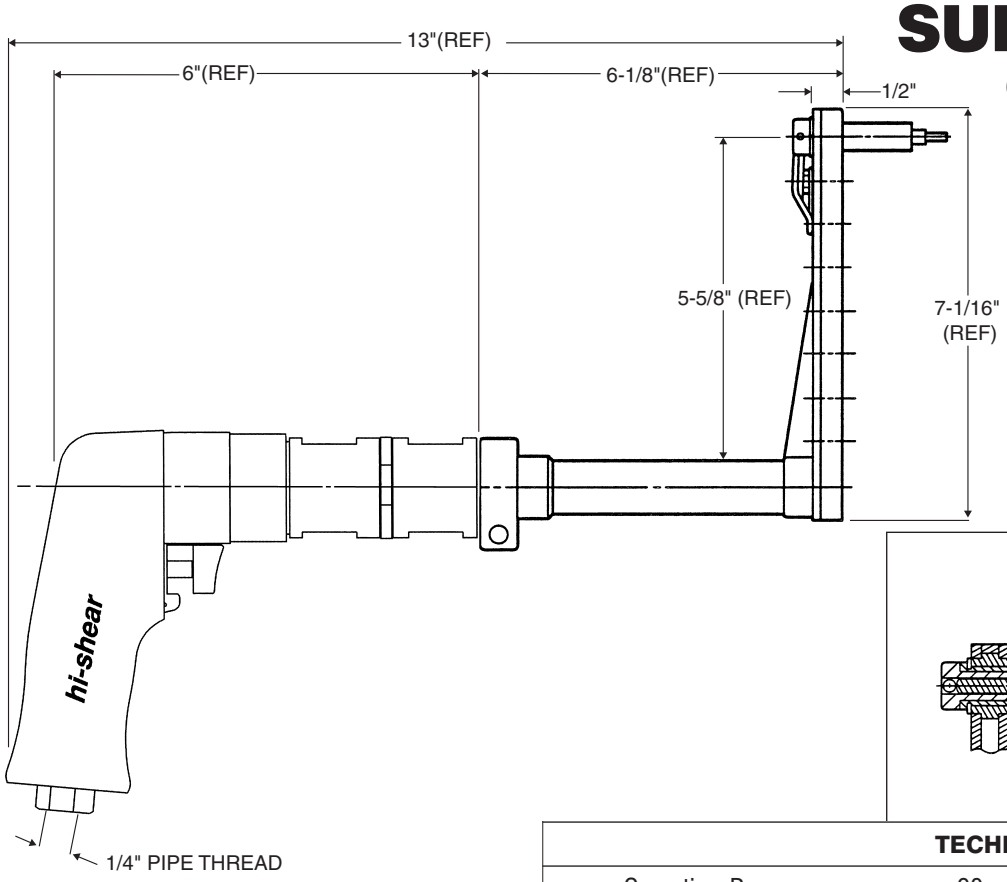

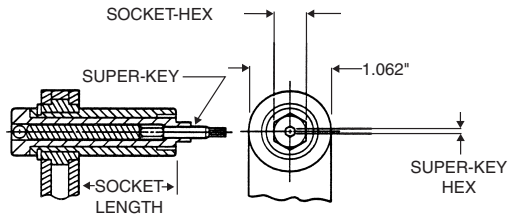

HLS76- ( )( )- ( ) T SOCKET ASSY

TECHNICAL DATA

Operating Pressure	90 PSIA	Horsepower Rating	0.70
MAX. TORQUE RATING (Motor)	300 in. lb @90 PSIA	Air Consumption	22 SCFM
Socket Speed	250 RPM	Weight	3.8 lb

DRIVER BASIC PART NO. — SOCKET HEX (REF TABLE 1 OR 2) — SOCKET LENGTH CODE (REF TABLE 2) — SUPER-KEY HEX (REF TABLE 1 OR 2) — SUPER-KEY (T-SERIES)

HLA3025-312(A)-078-T

Example: complete driver assy part no.

ORDERING INFORMATION

1. Match pin and collar hexes with Super-Key Hex and Socket Hex.
2. See table 1 for corresponding complete driver assy part no.

TABLE 2

A = 0.50	E = 0.75
B = 1.00	F = 1.75
C = 1.50	X = 4.00
D = 2.00	

TABLE 1

COLLAR DRIVING HEX (Matches Socket Hex)	PIN RECESS HEX (Matches Super-Key Hex)	COMPLETE DRIVER ASSY. PART NO.	OFFSET ADAPTOR & SOCKET ASSY. PART NO.	EXTENDED SOCKET ASSY. PART NO.
3/16	1/16	HLA3025-187( )-062T	HLG331-187( )-062T	HLS76-187( )-062T
7/32		HLA3025-218( )-062T	HLG331-218( )-062T	HLS76-218( )-062T
1/4		HLA3025-250( )-062T	HLG331-250( )-062T	HLS76-250( )-062T
9/32		HLA3025-281( )-062T	HLG331-281( )-062T	HLS76-281( )-062T
5/16		HLA3025-312( )-062T	HLG331-312( )-062T	HLS76-312( )-062T
11/32		HLA3025-343( )-062T	HLG331-343( )-062T	HLS76-343( )-062T
7/32	5/64	HLA3025-218( )-078T	HLG331-218( )-078T	HLS76-218( )-062T
1/4		HLA3025-250( )-078T	HLG331-250( )-078T	HLS76-250( )-062T
9/32		HLA3025-281( )-078T	HLG331-281( )-078T	HLS76-281( )-062T
5/16		HLA3025-312( )-078T	HLG331-312( )-078T	HLS76-312( )-062T
11/32		HLA3025-343( )-078T	HLG331-343( )-078T	HLS76-343( )-062T
3/8		HLA3025-375( )-078T	HLG331-375( )-078T	HLS76-375( )-062T
5/16	3/32	HLA3025-312( )-094T	HLG331-312( )-094T	HLS76-312( )-062T
11/32		HLA3025-343( )-094T	HLG331-343( )-094T	HLS76-343( )-062T
3/8		HLA3025-375( )-094T	HLG331-375( )-094T	HLS76-375( )-062T
7/16		HLA3025-437( )-094T	HLG331-437( )-094T	HLS76-437( )-062T
3/8	1/8	HLA3025-375( )-125T	HLG331-375( )-125T	HLS76-375( )-062T
7/16		HLA3025-437( )-125T	HLG331-437( )-125T	HLS76-437( )-062T

HLG331

6 Inch Offset Adaptor Assembly with Multi-Length Socket and Super-Key™ (T-Series)

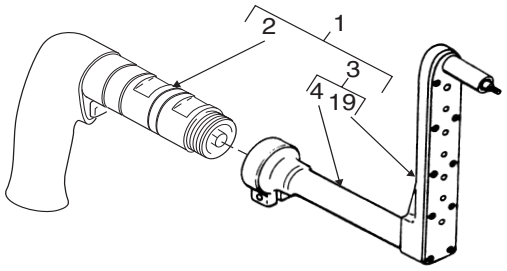

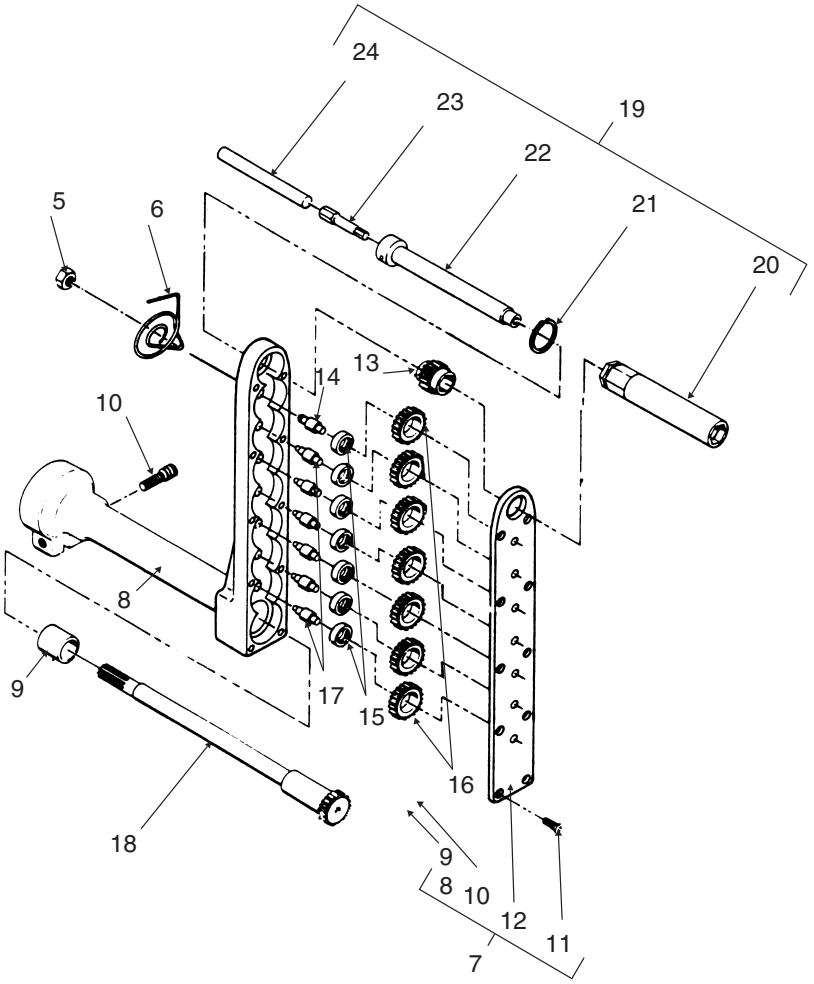

ITEM	PART NO.	DESCRIPTION	QTY
1	HLA3025-( )( )-( )T	Tool assy., complete	1
2	HLB1174-003	. Air motor assy.	1
3	HLG331-( )( )-( )T	. Offset adaptor and socket assy.	1
4	HLB332	. . Offset adaptor assy.	1
5	AN364-632C	. . . Nut, hex	1
6	HLB1475-5	. . . Spring, ejector	1
7	HLB1571	. . . Housing assy., complete	1
8	HLB1572	. . . . Housing sub-assy.	1
9	B810	. . . . . Bushing	1
10	1/4-28 x 5/8 lg.	. . . . Capscrew, socket head	1
11	6-32 x 3/8 lg.	. . . . Screw, countersunk-82°	10
12	HLB1573	. . . . Plate, cover	1
13	HLB23-437	. . . Gear, socket, 7/16 thru hex	1
14	HLB105	. . . Shaft, intermediate, no. 2	1
15	B34	. . . Bearing (Torrington)	7
16	HLB106-11	. . . Gear, intermediate	7
17	HLB159	. . . Gear, intermediate, no. 1	6
18	HLB103-5	. . . Gear, drive	2
19	HLS76-( )( )-( )	. . Socket assy., extended	1
20	HLS47-( )( ) **Table 3**	. . . Socket	1
21	5100-50	. . . Ring, retaining	1
22	HLB1665-( )( )	. . . Holder	1
23	HLT140K-( ) **Table 4**	. . . Super-Key	1
24	HLB1616-( )	. . . Spacer	1

TABLE 3

SOCKET GEAR

HEX SIZE (Matches Collar Driving Hex)	PART NO.
3/16	HLS47-187( )
7/32	HLS47-218( )
1/4	HLS47-250( )
9/32	HLS47-281( )
5/16	HLS47-312( )
11/32	HLS47-343( )
3/8	HLS47-375( )
7/16	HLS47-437( )

TABLE 4

SUPER-KEY

HEX SIZE (Matches Pin Recess Hex)	PART
1/16	HLT140K-062
5/64	HLT140K-078
3/32	HLT140K-094
1/8	HLT140K-125

Hi-Shear Corporation
2600 Skypark Dr. Torrance, CA 90509 USA
tel 310.326.8110 • Tool Div. fax 310.784.4270