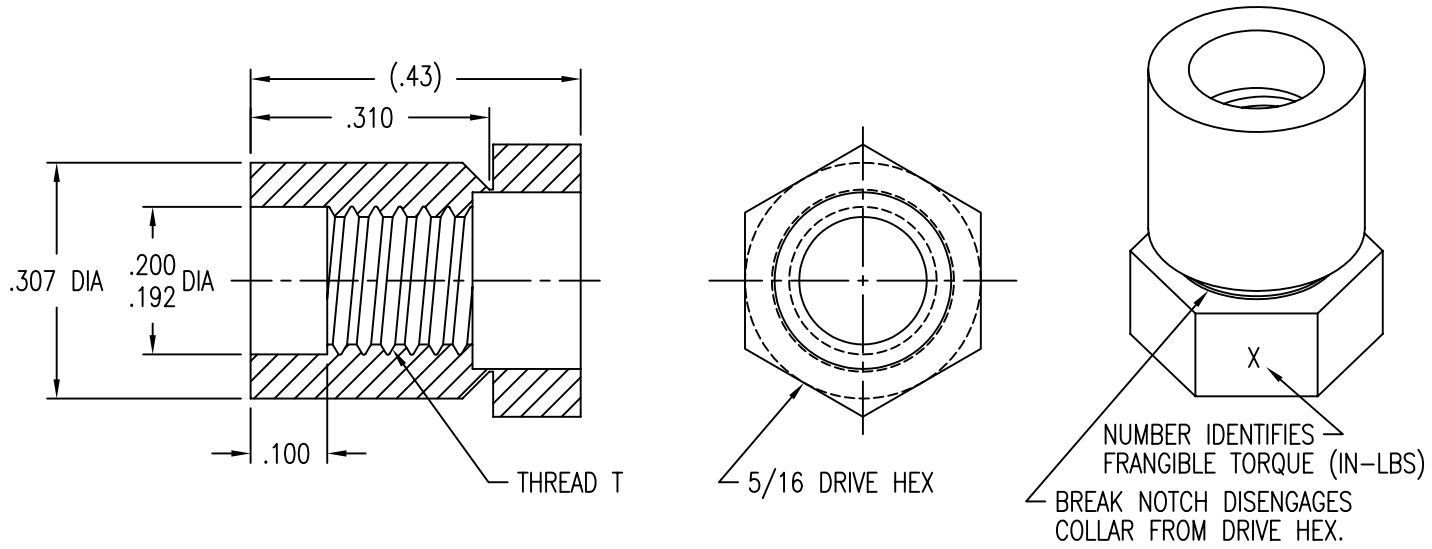

MATERIAL DATA

CODE	MATERIAL	SPEC.
PCS	PEEK/CARBON SHORT FIBER	BMS 8-317, TYPE 3, FORM C, GRADE 30

THREAD T DATA

CODE	THREAD T
3	.1900-32 UNF-3B

PART NUMBER

CB1916 PCS 3

- 3 — THREAD SIZE T – .1900-32 UNF-3B
- PCS — MATERIAL – PEEK, SHORT CARBON FIBER REINFORCED
- CB1916 — BASIC PART NUMBER

UNLESS OTHERWISE SPECIFIED, ALL DIMENSIONS ARE IN INCHES AND TOLERANCES ARE AS SHOWN BELOW. DIMENSIONAL TOLERANCES AND SYMBOLS PER ANSI Y14.5M-1982.

PROPRIETARY PARTS SHOWN IN THIS DRAWING ARE THE SUBJECT OF ISSUED UNITED STATES AND FOREIGN PATENTS AND PATENTS PENDING.
UNAUTHORIZED REPRODUCTION AND/OR DISTRIBUTION OF THIS DRAWING IS SPECIFICALLY PROHIBITED.

		APPROVALS	DATE
ANGLES	±1°	DRAWN BPEREZ	10MAR04
.XX	±.03	CHECKED DACarlton	10MAR04
.XXX	±.010	RELEASED CBCatti	10MAR04
.XXXX	±.001	REVISED BPEREZ	10MAR04

CLICK BOND

CARSON CITY
NEVADA 89706

TITLE: COLLAR, THREADED, SELF LOCKING

SIZE	CAGE CODE	DWG. NO.	REV.
A	66530	CB1916	3

SCALE 4/1 | 10MAR04 | SHEET 1 OF 1