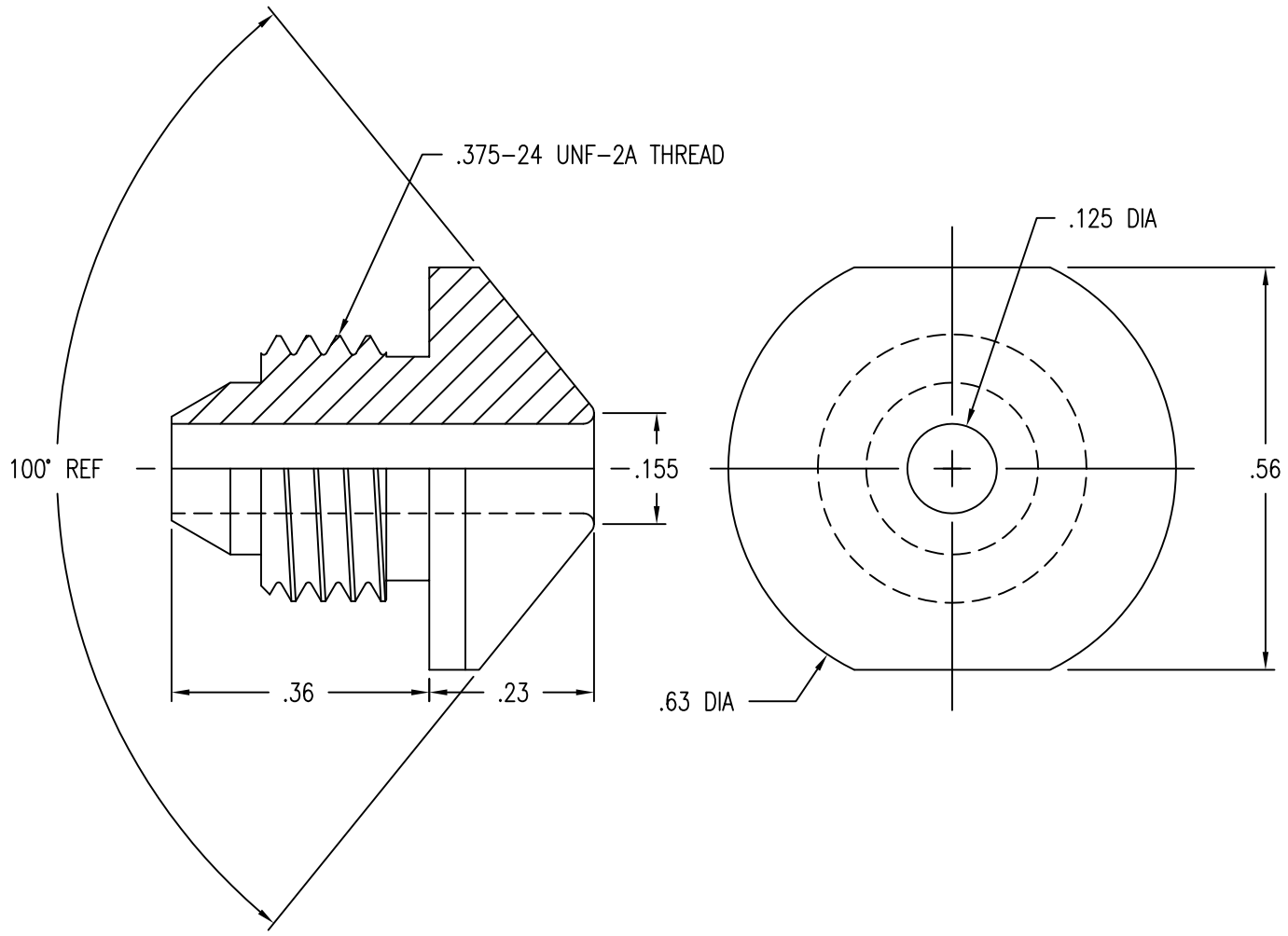

MATERIAL: TOOL STEEL

USED WITH: CB750 PULL TOOL
TO INSTALL FLARED SLEEVES

EXAMPLE PART NUMBER

CB752-155-100

- 100 → FLARE ANGLE IN DEGREES – 100°
- 155 → NOSE DIMENSION
- CB752 → BASIC PART NUMBER

UNLESS OTHERWISE SPECIFIED, ALL DIMENSIONS ARE IN INCHES AND TOLERANCES ARE AS SHOWN BELOW. DIMENSIONAL TOLERANCES AND SYMBOLS PER ANSI Y14.5M-1982.

PROPRIETARY PARTS SHOWN IN THIS DRAWING ARE THE SUBJECT OF ISSUED UNITED STATES AND FOREIGN PATENTS AND PATENTS PENDING.
UNAUTHORIZED REPRODUCTION AND/OR DISTRIBUTION OF THIS DRAWING IS SPECIFICALLY PROHIBITED.

		APPROVALS		DATE
ANGLES	±1°	DRAWN	BLM	12MAR02
.XX	±.03	CHECKED	DAC	13MAR02
.XXX	±.010	RELEASED	CGH	13MAR02
.XXXX	±.001	REVISED	BLM	12MAR02

CLICK BOND

CARSON CITY
NEVADA 89706

TITLE: NOSEPIECE, 100° FLARE IN PLACE

SIZE	CAGE CODE	DWG. NO.	REV.
A	66530	CB752	1

SCALE 4/1 | 12MAR02 | SHEET 1 OF 1